OFC OF THE SECRETARY
US INT'L TRADE COMMISSION
2004 MAY 14 PM 2:46

UNITED STATES INTERNATIONAL TRADE COMMISSION
Washington, D.C.

In the Matter of	)	
	)	
CERTAIN AGRICULTURAL VEHICLES AND COMPONENTS THEREOF	)	**Inv. No. 337-TA-487**
	)	
	)	

NOTICE OF ISSUANCE OF GENERAL EXCLUSION ORDER, LIMITED EXCLUSION ORDERS, AND CEASE AND DESIST ORDERS; TERMINATION OF THE INVESTIGATION

AGENCY: U.S. International Trade Commission.

ACTION: Notice.

SUMMARY: Notice is hereby given that the U.S. International Trade Commission has determined to issue a general exclusion order, two limited exclusion orders, and cease and desist orders in the above-captioned investigation. The investigation is terminated.

FOR FURTHER INFORMATION CONTACT: Wayne Herrington, Esq., Office of the General Counsel, U.S. International Trade Commission, 500 E Street, S.W., Washington, D.C. 20436, telephone (202) 205-3090. Copies of the ALJ's ID and all other nonconfidential documents filed in connection with this investigation are or will be available for inspection during official business hours (8:45 a.m. to 5:15 p.m.) in the Office of the Secretary, U.S. International Trade Commission, 500 E Street, S.W., Washington, D.C. 20436, telephone 202-205-2000. General information concerning the Commission may also be obtained by accessing its Internet server (*http://www.usitc.gov*). The public record for this investigation may be viewed on the Commission's electronic docket (EDIS-ON-LINE) at *http://edis.usitc.gov*. Hearing-impaired persons are advised that information on this matter can be obtained by contacting the Commission's TDD terminal on 202-205-1810.

SUPPLEMENTARY INFORMATION: The Commission instituted this investigation on February 13, 2003, based on a complaint filed by Deere & Company ("Deere") of Moline, Illinois. 68 *FR* 7388 (February 13, 2003). The complaint, as supplemented, alleged violations of section 337 of the Tariff Act of 1930 in the importation into the United States, sale for importation, and sale within the United States after importation of certain agricultural vehicles and components thereof by reason of infringement and dilution of U.S. Registered Trademarks Nos. 1,254,339; 1,502,103; 1,503,576; and 91,860.

On August 27, 2003, the Commission issued notice that it had determined not to review

Order No. 14, granting complainant's motion to amend the complaint and notice of investigation to add U.S. Trademark Registration No. 2,729,766.

On November 14, 2003, the Commission issued notice that it had determined not to review Order No. 29, granting complainant's motion for summary determination that complainant had met the technical prong of the domestic industry requirement.

Twenty-four respondents were named in the Commission's notice of investigation. Several of these have been terminated from the investigation on the basis of consent orders. Several other respondents have been found to be in default.

On January 13, 2004, the presiding administrative law judge ("ALJ") issued his final initial determination ("ID") finding a violation of section 337. He also recommended the issuance of remedial orders. Two groups of respondents petitioned for review of the ID. Complainant and the Commission investigative attorney ("IA") filed oppositions to those petitions.

On February 18, 2004, the Commission issued notice that it had decided to extend the time to determine whether to review the ID to March 29, 2004, and to extend the target date for completing the investigation to May 13, 2004.

On March 30, 2004, the Commission issued notice that it had decided not to review the ID and set a schedule for written submissions on remedy, the public interest, and bonding. Complainant, respondents, and the IA timely filed such submissions.

Having examined the relevant portions of the record in this investigation, including the ALJ's recommended determination, the written submissions on remedy, public interest, and bonding, and the replies thereto, the Commission determined to issue (1) a general exclusion order prohibiting the unlicensed entry for consumption of European version self-propelled forage harvesters manufactured by or under the authority of Deere & Co. which infringe any of the asserted trademarks, (2) a limited exclusion order prohibiting the unlicensed entry for consumption of European version telehandlers manufactured by or under the authority of Deere & Co. which infringe any of the asserted trademarks, (3) a limited exclusion order prohibiting the unlicensed entry for consumption of agricultural tractors which infringe one or more of U.S. Registered Trademarks Nos. 1,254,339; 1,502,103; and 1,503,576, (4) cease and desist orders to certain respondents prohibiting activities concerning the importation and sale of European version self-propelled forage harvesters manufactured by or under the authority of Deere & Co. which would constitute infringement of any of the asserted trademarks, (5) cease and desist orders to certain respondents prohibiting activities concerning the importation and sale of agricultural tractors which would constitute infringement of one or more of U.S. Registered Trademarks Nos. 1,254,339; 1,502,103; and 1,503,576.

The Commission also determined that the public interest factors enumerated in section

337(d) do not preclude the issuance of the aforementioned remedial orders and that the bond during the Presidential review period shall be 90 percent of the entered value of the articles in question.

This action is taken under the authority of section 337 of the Tariff Act of 1930, 19 U.S.C. § 1337, the Administrative Procedure Act, and sections 210.41-51 of the Commission's Rules of Practice and Procedure, 19 C.F.R. 210.41-51.

By order of the Commission.

Marilyn R. Abbott
Secretary to the Commission

Issued: May 14, 2004

CERTAIN AGRICULTURAL VEHICLES AND COMPONENTS THEREOF **337-TA-487**

CERTIFICATE OF SERVICE

I, Marilyn R. Abbott, hereby certify that the attached **NOTICE OF ISSUANCE OF GENERAL EXCLUSION ORDER, LIMITED EXCLUSION ORDERS, AND CEASE AND DESIST ORDERS; TERMINATION OF THE INVESTIGATION,** was served upon all parties via first class mail and air mail where necessary on May 14, 2004..

Marilyn R. Abbott, Secretary
U.S. International Trade Commission
500 E Street, SW - Room 112
Washington, DC 20436

ON BEHALF OF COMPLAINANT DEERE AND COMPANY:

Robert S. Swecker, Esq.
Burns, Doane, Swecker and Mathis, LLP
1737 King Street, Suite 500
Alexandria, Virginia 22314

ON BEHALF OF FITZPATRICK FARMS, CO-AG LLC, STANLEY FARM AND J&T FARMS:

William A. Zeitler, Esq
Thompson Coburn, LLP
1909 K Street, NW
Suite 600
Washington, DC 20006

ON BEHALF OF BOURDEAU BROS., INC., ERNTETECHNIK FRANZ BECKER., OK ENTERPRISES AND SUNOVA IMPLEMENT COMPANY:

David P. Miranda, Esq.
Heslin Rothenberg Farley & Mesiti, P.C.
5 Columbia Circle
Albany, NY 12203

UNITED STATES INTERNATIONAL TRADE COMMISSION
Washington, D.C.

In the Matter of CERTAIN AGRICULTURAL VEHICLES AND COMPONENTS THEREOF	Inv. No. 337-TA-487

GENERAL EXCLUSION ORDER

The Commission has determined in this investigation that there is a violation of Section 337 of the Tariff Act of 1930 (19 U.S.C. § 1337) in the unlawful importation, sale for importation and/or sale after importation of certain agricultural vehicles thereof that infringe U.S. Trademark Registration Nos. 1,254,339; 1,502,103; 1,503,576; 91,860; and 2,729,766.

Having reviewed the record in this investigation, including the written submissions of the parties, the Commission has made its determination on the issues of remedy, the public interest, and bonding. The Commission has determined that the appropriate form of relief in this investigation is a general exclusion order directed to self-propelled forage harvesters, and limited exclusion orders directed to telehandlers and agricultural tractors, respectively. The Commission has also determined to issue cease and desist orders against certain respondents with respect to self-propelled forage harvesters and agricultural tractors.

The Commission has further determined that the public interest factors enumerated in 19 U.S.C. § 1337 (d) and (f) do not preclude issuance of the exclusion orders or the cease and desist orders, and that the bond during the Presidential review period shall be in the amount of ninety (90) percent of the entered value of any imported infringing agricultural vehicles.

The general exclusion order, limited exclusion orders, and cease and desist orders are being issued as separate orders. The general exclusion order is set out below.

The Commission hereby **ORDERS** that:

1. Self-propelled forage harvesters manufactured by or under authority of Deere & Company (5000 and 6000 series) for sale and use in Europe which (a) bear one or more of the following federally-registered U.S. trademarks:

   U.S. Reg. No. 1,254,339;

   U.S. Reg. No. 1,502,103;

   U.S. Reg. No. 1,503,576;

   U.S. Reg. No. 91,860; and

   U.S. Reg. No. 2,729,766,[1]

   and (b) are materially different from self-propelled forage harvesters manufactured by or under authority of Deere and Company for sale and use in the United States, are excluded from entry for consumption into the United States, entry for consumption from a foreign-trade zone, or withdrawal from warehouse for consumption, except if imported by, under license

---

[1] Copies of these registrations are attached.

from, or with the permission of the trademark owner, or as provided by law, until such date as the trademarks are abandoned, canceled, or rendered invalid or unenforceable. This paragraph shall apply to covered forage harvesters exported, shipped, sold, purchased, or imported by any and all persons, including authorized John Deere dealers.

2. Self-propelled forage harvesters excludable under paragraph 1 of this Order are entitled to entry for consumption into the United States, entry for consumption from a foreign-trade zone, or withdrawal from warehouse for consumption, under bond in the amount of ninety (90) percent of entered value pursuant to subsection (j) of section 337 of the Tariff Act of 1930, as amended, 19 U.S.C. § 1337(j), from the day after this Order is received by the President until such time as the President notifies the Commission that he approves or disapproves this action but, in any event, not later than sixty (60) days after the date of receipt of this action.

3. In accordance with 19 U.S.C. § 1337(l), the provisions of this Order shall not apply to self-propelled forage harvesters that are imported by and for the use of the United States, or imported for, and to be used for, the United States with the authorization or consent of the Government.

4. Complainant Deere & Company shall file a written statement with the Commission, made under oath, each year on the anniversary of the issuance of this Order stating whether Deere & Company continues to use each of the aforesaid trademarks in commerce in the United States in connection with self-propelled forage harvesters and whether any of the aforesaid trademarks has been abandoned, canceled, or rendered invalid or unenforceable.

5. The Commission may modify this Order in accordance with the procedures described in Rule 210.76 of the Commission's Rules of Practice and Procedure, 19 C.F.R. § 210.76.

6. The Secretary shall serve copies of this Order upon each party of record in this investigation and upon the Department of Health and Human Services, the Department of Justice, the Federal Trade

Commission, and the U.S. Bureau of Customs and Border Protection.

7. Notice of this Order shall be published in the *Federal Register*.

By Order of the Commission.

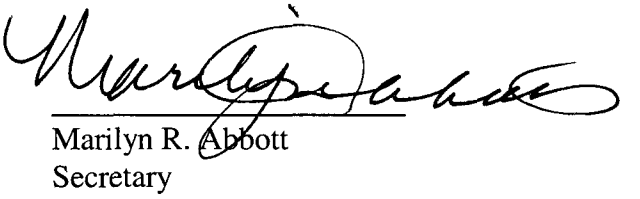

Marilyn R. Abbott
Secretary

Issued: May 14, 2004

Int. Cls.: 7 and 12

Prior U.S. Cls.: 19 and 23

United States Patent and Trademark Office

Reg. No. 1,254,339

Registered Oct. 18, 1983

TRADEMARK

Principal Register

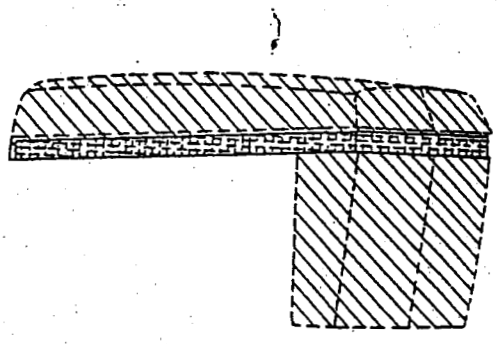

Deere & Company (Delaware corporation)
John Deere Rd.
Moline, Ill. 61265

For: AGRICULTURAL AND LAWN CARE MACHINES—NAMELY, BALERS, WINDROWERS, MOWER-CONDITIONERS, FORAGE HARVESTERS, SEEDERS, COMBINES, SPRAYERS, BEET HARVESTERS, COTTON HARVESTERS, HAY STACKING MACHINES AND LAWN MOWERS, in CLASS 7 (U.S. Cl. 23).

First use 1968; in commerce 1968.

For: TRACTORS AND POWER-OPERATED CARTS FOR CARRYING GRAIN, in CLASS 12 (U.S. Cl. 19).

First use 1956; in commerce 1956.

The drawing is lined for the colors green and yellow.

The mark consists of a horizontal yellow stripe on a green machine hood or panel.

The configuration of a machine hood is shown by dotted lines in the drawing and does not form a part of the mark.

Sec. 2(f).

Ser. No. 357,211, filed Mar. 29, 1982.

JEFFERSON FRIDAY, Examining Attorney

Int. Cl.: 12

Prior U.S. Cl.: 19

United States Patent and Trademark Office

Reg. No. 1,502,103
Registered Aug. 30, 1988

TRADEMARK
PRINCIPAL REGISTER

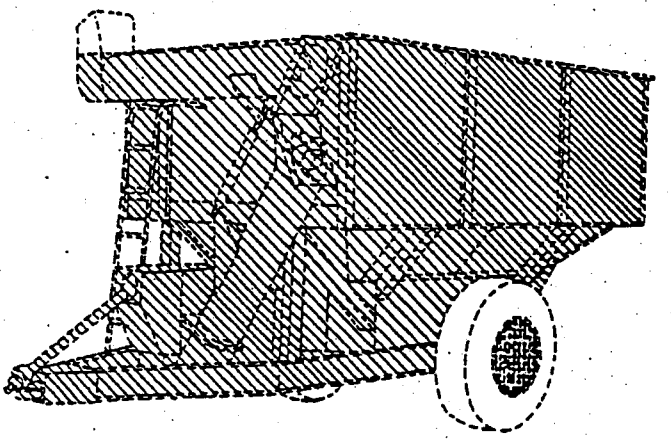

DEERE & COMPANY (DELAWARE CORPORATION)
JOHN DEERE ROAD
MOLINE, IL 61265

FOR: AGRICULTURAL TRACTORS, LAWN AND GARDEN TRACTORS, TRAILERS, WAGONS, AND CARTS, IN CLASS 12 (U.S. CL. 19).

FIRST USE 12-31-1918; IN COMMERCE 12-31-1918.

OWNER OF U.S. REG. NOS. 1,254,339 AND 1,296,442.

THE DRAWING IS LINED FOR A BRIGHT GREEN COLOR, SOMETIMES KNOWN AS "JOHN DEERE" GREEN, AND A BRIGHT YELLOW COLOR, AND CLAIM IS MADE FOR SUCH COLORS.

THE MARK CONSISTS OF A GREEN VEHICLE BODY OR FRAME WITH YELLOW WHEELS. THE CONFIGURATION OF A GRAIN CART IS SHOWN IN DOTTED LINES IN THE DRAWINGS FOR ILLUSTRATIVE PURPOSES ONLY AND DOES NOT FORM A PART OF THE MARK.

SEC. 2(F).

SER. NO. 574,308, FILED 12-19-1985.

DAVID H. STINE, EXAMINING ATTORNEY

Int. Cl.: 7

Prior U.S. Cl.: 23

Reg. No. 1,503,576

United States Patent and Trademark Office

Registered Sep. 13, 1988

TRADEMARK
PRINCIPAL REGISTER

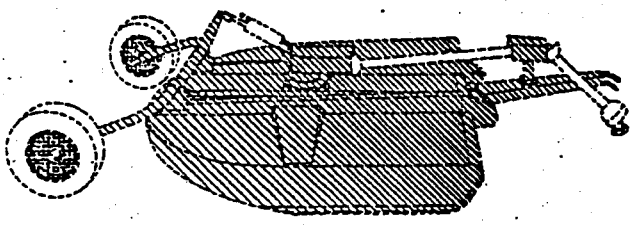

DEERE & COMPANY (DELAWARE CORPORATION)
JOHN DEERE ROAD
MOLINE, IL 61265

FOR: WHEELED AGRICULTURAL, LAWN AND GARDEN, AND MATERIAL HANDLING MACHINES, NAMELY, TILLAGE MACHINES, HAYING MACHINES, HARVESTING MACHINES, MOWERS, CUTTERS, SHREDDERS, SPRAYERS, LOADERS, SPREADERS, PLANTING MACHINES, AND SNOW REMOVAL MACHINES, IN CLASS 7 (U.S. CL. 23).

FIRST USE 12-31-1905; IN COMMERCE 12-31-1905.

OWNER OF U.S. REG. NOS. 1,254,339 AND 1,296,442.

THE DRAWING IS LINED FOR A BRIGHT GREEN COLOR, AND A BRIGHT YELLOW COLOR, AND CLAIM IS MADE FOR SUCH COLORS.

SEC. 2(F).

SER. NO. 574,301, FILED 12-19-1985.

DAVID H. STINE, EXAMINING ATTORNEY

Int. Cl.: 7

Prior U.S. Cl.: 23

United States Patent and Trademark Office

10 Year Renewal

Reg. No. 91,860

Registered June 3, 1913

Renewal Term Begins June 3, 1993

TRADEMARK
PRINCIPAL REGISTER

JOHN DEERE

DEERE & COMPANY (DELAWARE CORPORATION)
JOHN DEERE ROAD
MOLINE, IL 61265, BY MERGER WITH DEERE & COMPANY (ILLINOIS CORPORATION) MOLINE, IL

FOR: PLOWS, CULTIVATORS, HARROWS, MOWERS, [~~REAPERS~~,] GRAIN HARVESTERS [~~AND BINDERS~~], HAY-RAKES, HAY-PRESSES, [~~HAY-TEDDERS, HAY-LOADERS, HAY-STACKERS, HAY-UNLOADERS, HAY-FORKS, HAND-AND-POWER~~] CORN, COTTON [, ~~POTATO, AND GARDEN-SEED~~] PLANTERS, [~~HAND-AND-POWER BROADCAST SEEDERS~~,] GRAIN-DRILLS, [POTATO-DIGGERS, ~~POTATO-SORTERS~~,] MANURE-SPREADERS, FERTILIZER-DISTRIBUTORS, SPRAYING-MACHINES, [~~WINDMILLS~~,] STALK-CUTTERS, SURFACE-GRADERS, CORN HARVESTERS [~~AND HUSKERS~~, CORN-SHELLERS, FEED-GRINDERS,] ENSILAGE-CUTTERS, [~~FEED-CUTTERS, HORSE-POWERS~~, SPEED-JACKS FOR HORSE-POWERS,] LAWN-MOWERS, [~~CLOD-CRUSHERS~~,] SOIL-PULVERIZERS [, ~~LAND-ROLLERS, SPRAYING AND FARM PUMPS, CIDER-MILLS, CANE-MILLS, GRAIN-ELEVATORS, ELEVATORS AND CONVEYORS FOR CORN-SHELLERS AND ENSILAGE-CUTTERS, EVAPORATORS~~, WOOD-SAWING MACHINES, AND GASOLENE-ENGINES], IN CLASS 23 (INT. CL. 7).

FIRST USE 0-0-1870; IN COMMERCE 0-0-1870.

SER. NO. 71-055,629, FILED 4-8-1911.

In testimony whereof I have hereunto set my hand and caused the seal of The Patent and Trademark Office to be affixed on Apr. 27, 1993.

COMMISSIONER OF PATENTS AND TRADEMARKS

RENEWED

UNITED STATES PATENT OFFICE.

DEERE & COMPANY, OF MOLINE, ILLINOIS.

TRADE-MARK FOR CERTAIN NAMED CUTLERY, MACHINERY, AND TOOLS.

91,860. Registered June 3, 1913.

Application filed April 8, 1911. Serial No. 55,629.

STATEMENT.

To all whom it may concern:

Be it known that DEERE & COMPANY, a corporation duly organized under the laws of the State of Illinois, and located and doing business in the city of Moline, county of Rock Island, and State of Illinois, has adopted for its use the trade-mark shown in the accompanying drawing, for plows, cultivators, harrows, mowers, ~~reapers,~~ grain harvesters ~~and binders~~, hay-rakes, hay-presses, ~~hay-tedders~~, hay-loaders, ~~hay-stackers, hay-unloaders, hay-forks, hand and power~~ corn, cotton, ~~potato, and garden seed~~ planters, hand and power broadcast ~~seeders~~, grain-drills, potato-diggers, ~~potato-sorters~~, manure-spreaders, fertilizer-distributers, spraying-machines, ~~windmills~~, stalk-cutters, surface-graders, corn harvesters ~~and huskers, corn shellers, feed grinders~~, ensilage-cutters, ~~feed cutters~~, ~~horse powers~~, speed-jacks for horse-powers, lawn-mowers, ~~clod crushers~~, soil-pulverizers, land-rollers, ~~spraying and farm pumps~~, cider ~~mills, cane mills, grain elevators~~, elevators ~~and conveyers for corn shellers and~~ ensilage-cutters, evaporators, wood-sawing machines, ~~and gasolene engines~~, in Class 23, Cutlery, machinery, and tools and parts thereof.

The trade-mark has been used continuously by said corporation, and by its predecessors, John Deere & Company and John Deere, since about the year 1870.

The trade-mark is applied or affixed to the goods, or to the packages containing the same, by painting or stenciling it thereon, but it may be applied in any suitable manner.

Moline, Illinois, March 6th, 1911.

DEERE & COMPANY,
By G. W. MIXTER,
Vice-President.

Witnesses:
A. A. CONWELL,
FRED H. COOPER.

JOHN DEERE

DECLARATION.

State of Illinois county of Rock Island ss.

GEORGE W. MIXTER, being duly sworn, deposes and says that he is a vice-president of the corporation named as applicant in the foregoing statement; that he believes the foregoing statement is true; that he believes said corporation to be the owner of the mark sought to be registered; that no other person, firm, corporation or association, to the best of his knowledge and belief, has the right to use said mark in the United States, either in the identical form or in any such near resemblance thereto as might be calculated to deceive; that said mark is used by said corporation in commerce among the several States of the United States, and between the United States and foreign nations or Indian tribes, and particularly with Canada; that the description and drawing presented truly represent the mark sought to be registered; that the facsimiles show the mark as actually used upon the goods, and that the mark has been in actual use as a trade-mark of the applicant and applicant's predecessors from whom title was derived, for ten years next preceding February 20, 1905, and that to the best of his knowledge and belief, such use has been exclusive.

GEORGE W. MIXTER.

Sworn and subscribed to before me, a notary public, this 3rd day of October, 1911.

[L. S.] P. C. SIMMON,
Notary Public.

Copies of this trade-mark may be obtained for five cents each, by addressing the "Commissioner of Patents, Washington, D. C."

Re-renewed June 3, 1953, to Deere & Company, of Moline, Illinois, a corporation of Illinois.

Int. Cl.: 7

Prior U.S. Cls.: 13, 19, 21, 23, 31, 34, and 35

Reg. No. 2,729,766

United States Patent and Trademark Office

Registered June 24, 2003

TRADEMARK
PRINCIPAL REGISTER

DEERE & COMPANY (DELAWARE CORPORATION)
ONE JOHN DEERE PLACE
MOLINE, IL 61265

FOR: AGRICULTURAL MACHINES, NAMELY, PLOWS, CULTIVATORS, HARROWS, REAPERS, GRAIN HARVESTERS, HAY RAKES, STACKERS, UNLOADERS, FORKS, POWER CORN, COTTON, POTATO, SEED PLANTERS, POWER BROADCAST SEEDERS, GRAIN DRILLS, POTATO DIGGERS, MANURE SPREADERS, FERTILIZER DISTRIBUTORS, SPRAYING MACHINES, STALK CUTTERS, SURFACE GRADERS, CORN HARVESTERS AND HUSKERS, CORN SHELLERS, FEED GRINDERS, ENSILAGE CUTTERS, FEED CUTTERS, LAWN MOWERS AND REEL MOWER VEHICLES, CLOD CRUSHERS, SOIL PULVERIZERS, LAND ROLLERS, SPRAYING AND FARM PUMPS, COMBINES; EARTH-MOVING MACHINES, NAMELY, LOGGING, LANDSHAPING AND LAND-CLEARING MACHINES, LOADERS, SKID STEER LOADERS, LOADER BACKHOES, BULLDOZERS, EXCAVATORS, SCRAPERS; WOOD SAWING MACHINES; HIGH PRESSURE SPRAY-TYPE WASHING MACHINE FOR SPRAYING WATER, DETERGENTS AND OTHER LIQUIDS; SNOW BLOWERS AND SNOW THROWERS; CHAIN SAWS; POSTHOLE DIGGERS; AND GASOLINE AND DIESEL INTERNAL COMBUSTION ENGINES FOR THE AFOREMENTIONED MACHINES, IN CLASS 7 (U.S. CLS. 13, 19, 21, 23, 31, 34 AND 35).

FIRST USE 11-1-2000; IN COMMERCE 11-1-2000.

SN 76-095,359, FILED 7-19-2000.

MARC LEIPZIG, EXAMINING ATTORNEY

UNITED STATES INTERNATIONAL TRADE COMMISSION
Washington, D.C.

In the Matter of CERTAIN AGRICULTURAL VEHICLES AND COMPONENTS THEREOF	Inv. No. 337-TA-487

LIMITED EXCLUSION ORDER (TELEHANDLERS)

The Commission has determined in this investigation that there is a violation of Section 337 of the Tariff Act of 1930 (19 U.S.C. § 1337) in the unlawful importation, sale for importation and/or sale after importation of certain agricultural vehicles thereof that infringe U.S. Trademark Registration Nos. 1,254,339; 1,502,103; 1,503,576; 91,860; and 2,729,766.

Having reviewed the record in this investigation, including the written submissions of the parties, the Commission has made its determination on the issues of remedy, the public interest, and bonding. The Commission has determined that the appropriate form of relief in this investigation is a general exclusion order directed to self-propelled forage harvesters, and limited exclusion orders directed to telehandlers and agricultural tractors, respectively. The Commission has also determined to issue cease and desist orders against certain respondents with respect to self-propelled forage harvesters and agricultural tractors.

The Commission has further determined that the public interest factors enumerated in 19 U.S.C. § 1337 (d) and (f) do not preclude issuance of the exclusion orders or the cease and desist orders, and that the bond during the Presidential review period shall be in the amount of ninety (90) percent of the entered value of any imported infringing agricultural vehicles.

The general exclusion order, limited exclusion orders, and cease and desist orders are being issued as separate orders. The limited exclusion order with respect to telehandlers is set out below.

The Commission hereby **ORDERS** that:

1. Telehandlers manufactured by or under authority of Deere & Company for sale and use in Europe which (a) bear one or more of the following federally-registered U.S. trademarks:

   U.S. Reg. No. 1,254,339;

   U.S. Reg. No. 1,502,103;

   U.S. Reg. No. 1,503,576;

   U.S. Reg. No. 91,860; and

   U.S. Reg. No. 2,729,766,[1]

   (b) are imported by or on behalf of Agra-Infocentrum-Benelux, Fitzpatrick Farms, or Stanley Farms, or any of their affiliated companies, parents, subsidiaries, contractors, licensees, or other related business entities, or their successors or assigns, and (c) are materially different from telehandlers manufactured by or under authority of Deere for sale and use in the United States are excluded from entry for consumption into the United States, entry

---

[1] Copies of these registrations are attached.

for consumption from a foreign-trade zone, or withdrawal from warehouse for consumption, except if imported by, under license from, or with the permission of the trademark owner, or as provided by law, until such date as the trademarks are abandoned, canceled, or rendered invalid or unenforceable.

2. Telehandlers excludable under paragraph 1 of this Order are entitled to entry for consumption into the United States, entry for consumption from a foreign-trade zone, or withdrawal from warehouse for consumption, under bond in the amount of ninety (90) percent of entered value pursuant to subsection (j) of section 337 of the Tariff Act of 1930, as amended, 19 U.S.C. § 1337(j), from the day after this Order is received by the President until such time as the President notifies the Commission that he approves or disapproves this action but, in any event, not later than sixty (60) days after the date of receipt of this action.

3. In accordance with 19 U.S.C. § 1337(l), the provisions of this Order shall not apply to telehandlers that are imported by and for the use of the United States, or imported for, and to be used for, the United States with the authorization or consent of the Government.

4. Complainant Deere & Company shall file a written statement with the Commission, made under oath, each year on the anniversary of the issuance of this Order stating whether Deere & Company continues to use each of the aforesaid trademarks in commerce in the United States in connection with telehandlers and whether any of the aforesaid trademarks has been abandoned, canceled, or rendered invalid or unenforceable.

5. The Commission may modify this Order in accordance with the procedures described in Rule 210.76 of the Commission's Rules of Practice and Procedure, 19 C.F.R. § 210.76.

6. The Secretary shall serve copies of this Order upon each party of record in this investigation and upon the Department of Health and Human Services, the Department of Justice, the Federal Trade Commission, and the U.S. Bureau of Customs and Border Protection.

7. Notice of this Order shall be published in the *Federal Register*.

By Order of the Commission.

Marilyn R. Abbott
Secretary

Issued: May 14, 2004

Int. Cls.: 7 and 12

Prior U.S. Cls.: 19 and 23

United States Patent and Trademark Office

Reg. No. 1,254,339

Registered Oct. 18, 1983

TRADEMARK

Principal Register

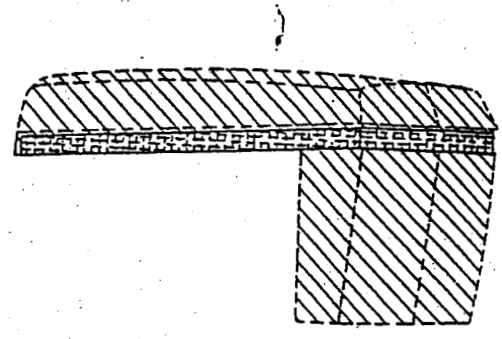

Deere & Company (Delaware corporation)
John Deere Rd.
Moline, Ill. 61265

For: AGRICULTURAL AND LAWN CARE MACHINES—NAMELY, BALERS, WINDROWERS, MOWER-CONDITIONERS, FORAGE HARVESTERS, SEEDERS, COMBINES, SPRAYERS, BEET HARVESTERS, COTTON HARVESTERS, HAY STACKING MACHINES AND LAWN MOWERS, in CLASS 7 (U.S. Cl. 23).

First use 1968; in commerce 1968.

For: TRACTORS AND POWER-OPERATED CARTS FOR CARRYING GRAIN, in CLASS 12 (U.S. Cl. 19).

First use 1956; in commerce 1956.

The drawing is lined for the colors green and yellow.

The mark consists of a horizontal yellow stripe on a green machine hood or panel.

The configuration of a machine hood is shown by dotted lines in the drawing and does not form a part of the mark.

Sec. 2(f).

Ser. No. 357,211, filed Mar. 29, 1982.

JEFFERSON FRIDAY, Examining Attorney

Int. Cl.: 12

Prior U.S. Cl.: 19

Reg. No. 1,502,103

United States Patent and Trademark Office

Registered Aug. 30, 1988

TRADEMARK
PRINCIPAL REGISTER

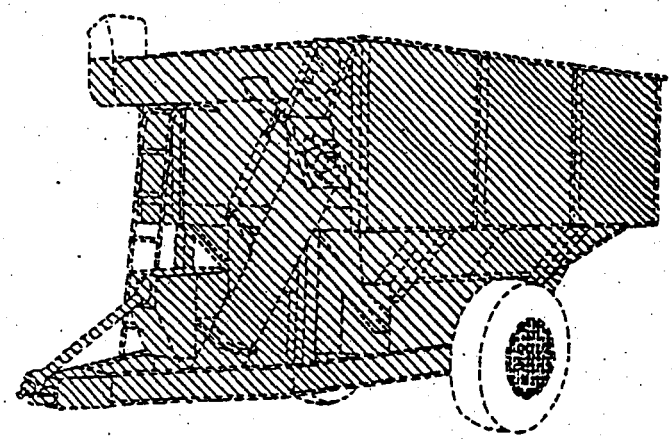

DEERE & COMPANY (DELAWARE CORPORATION)
JOHN DEERE ROAD
MOLINE, IL 61265

FOR: AGRICULTURAL TRACTORS, LAWN AND GARDEN TRACTORS, TRAILERS, WAGONS, AND CARTS, IN CLASS 12 (U.S. CL. 19).

FIRST USE 12-31-1918; IN COMMERCE 12-31-1918.

OWNER OF U.S. REG. NOS. 1,254,339 AND 1,296,442.

THE DRAWING IS LINED FOR A BRIGHT GREEN COLOR, SOMETIMES KNOWN AS "JOHN DEERE" GREEN, AND A BRIGHT YELLOW COLOR, AND CLAIM IS MADE FOR SUCH COLORS.

THE MARK CONSISTS OF A GREEN VEHICLE BODY OR FRAME WITH YELLOW WHEELS. THE CONFIGURATION OF A GRAIN CART IS SHOWN IN DOTTED LINES IN THE DRAWINGS FOR ILLUSTRATIVE PURPOSES ONLY AND DOES NOT FORM A PART OF THE MARK.

SEC. 2(F).

SER. NO. 574,308, FILED 12-19-1985.

DAVID H. STINE, EXAMINING ATTORNEY

Int. Cl.: 7

Prior U.S. Cl.: 23

United States Patent and Trademark Office

Reg. No. 1,503,576

Registered Sep. 13, 1988

TRADEMARK
PRINCIPAL REGISTER

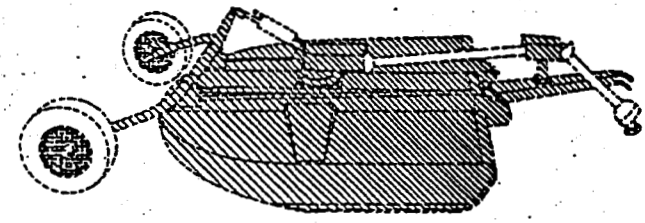

DEERE & COMPANY (DELAWARE CORPORATION)
JOHN DEERE ROAD
MOLINE, IL 61265

FOR: WHEELED AGRICULTURAL, LAWN AND GARDEN, AND MATERIAL HANDLING MACHINES, NAMELY, TILLAGE MACHINES, HAYING MACHINES, HARVESTING MACHINES, MOWERS, CUTTERS, SHREDDERS, SPRAYERS, LOADERS, SPREADERS, PLANTING MACHINES, AND SNOW REMOVAL MACHINES, IN CLASS 7 (U.S. CL. 23).

FIRST USE 12-31-1905; IN COMMERCE 12-31-1905.

OWNER OF U.S. REG. NOS. 1,254,339 AND 1,296,442.

THE DRAWING IS LINED FOR A BRIGHT GREEN COLOR, AND A BRIGHT YELLOW COLOR, AND CLAIM IS MADE FOR SUCH COLORS.

SEC. 2(F).

SER. NO. 574,301, FILED 12-19-1985.

DAVID H. STINE, EXAMINING ATTORNEY

Int. Cl.: 7

Prior U.S. Cl.: 23

United States Patent and Trademark Office

10 Year Renewal

Reg. No. 91,860

Registered June 3, 1913

Renewal Term Begins June 3, 1993

TRADEMARK
PRINCIPAL REGISTER

JOHN DEERE

DEERE & COMPANY (DELAWARE CORPORATION)
JOHN DEERE ROAD
MOLINE, IL 61265, BY MERGER WITH DEERE & COMPANY (ILLINOIS CORPORATION) MOLINE, IL

FOR: PLOWS, CULTIVATORS, HARROWS, MOWERS, [~~REAPERS,~~] GRAIN HARVESTERS [~~AND BINDERS~~], HAY-RAKES, HAY-PRESSES, [~~HAY-TEDDERS, HAY-LOADERS, HAY-STACKERS, HAY-UNLOADERS, HAY-FORKS, HAND-AND-POWER~~] CORN, COTTON [, ~~POTATO, AND GARDEN-SEED~~] PLANTERS, [HAND AND ~~POWER BROADCAST SEEDERS,~~] GRAIN-DRILLS, [POTATO-DIGGERS, ~~POTATO-SORTERS,~~] MANURE-SPREADERS, FERTILIZER-DISTRIBUTORS, SPRAYING-MACHINES, [WIND~~MILLS,~~] STALK-CUTTERS, SURFACE-GRADERS, CORN HARVESTERS [~~AND HUSKERS,~~ CORN-SHELLERS, FEED-GRINDERS,] ENSILAGE-CUTTERS, [~~FEED-CUTTERS, HORSE-POWERS,~~ SPEED-JACKS FOR HORSE-~~POWERS,~~] LAWN-MOWERS, [~~CLOD-CRUSHERS,~~] SOIL-PULVERIZERS [, ~~LAND-ROLLERS,~~ SPRAYING ~~AND FARM-PUMPS, CIDER-MILLS, CANE-MILLS, GRAIN-ELEVATORS,~~ ELEVATORS ~~AND CONVEYORS~~ FOR CORN-SHELLERS ~~AND ENSILAGE-CUTTERS, EVAPORATORS,~~ WOOD-SAWING MACHINES, AND GASOLENE-ENGINES], IN CLASS 23 (INT. CL. 7).

FIRST USE 0-0-1870; IN COMMERCE 0-0-1870.

SER. NO. 71-055,629, FILED 4-8-1911.

In testimony whereof I have hereunto set my hand and caused the seal of The Patent and Trademark Office to be affixed on Apr. 27, 1993.

COMMISSIONER OF PATENTS AND TRADEMARKS

RENEWED

UNITED STATES PATENT OFFICE.

DEERE & COMPANY, OF MOLINE, ILLINOIS.

TRADE-MARK FOR CERTAIN NAMED CUTLERY, MACHINERY, AND TOOLS.

91,860. Registered June 3, 1913.

Application filed April 8, 1911. Serial No. 55,629.

STATEMENT.

To all whom it may concern:

Be it known that DEERE & COMPANY, a corporation duly organized under the laws of the State of Illinois, and located and doing business in the city of Moline, county of Rock Island, and State of Illinois, has adopted for its use the trade-mark shown in the accompanying drawing, for plows, cultivators, harrows, mowers, ~~reapers,~~ grain harvesters ~~and binders~~, hay-rakes, hay-presses, ~~hay-tedders~~, hay-loaders, ~~hay-stackers, hay-unloaders, hay-forks, hand and power~~ corn, cotton, ~~potato, and garden seed~~ planters, hand and power broadcast ~~seeders~~, grain-drills, potato-diggers, ~~potato sorters~~, manure-spreaders, fertilizer-distributers, spraying-machines, ~~windmills~~, stalk-cutters, surface-graders, corn harvesters ~~and huckers, corn shellers, feed grinders~~, ensilage-cutters, ~~feed cutters~~, ~~horse powers~~, speed-jacks for horse-powers, lawn-mowers, ~~clod crushers~~, soil-pulverizers, land-rollers, ~~spraying and farm pumps~~, cider-~~mills, cane mills, grain elevators~~, elevators ~~and conveyers for corn shellers and~~ ensilage-cutters, evaporators, wood-sawing machines, ~~and gasolene engines~~, in Class 23, Cutlery, machinery, and tools and parts thereof.

The trade-mark has been used continuously by said corporation, and by its predecessors, John Deere & Company and John Deere, since about the year 1870.

The trade-mark is applied or affixed to the goods, or to the packages containing the same, by painting or stenciling it thereon, but it may be applied in any suitable manner.

Moline, Illinois, March 6th, 1911.

DEERE & COMPANY,
By G. W. MIXTER,
Vice-President.

Witnesses:
A. A. CONWELL,
FRED H. COOPER.

JOHN DEERE

DECLARATION.

State of Illinois county of Rock Island ss.

GEORGE W. MIXTER, being duly sworn, deposes and says that he is a vice-president of the corporation named as applicant in the foregoing statement; that he believes the foregoing statement is true; that he believes said corporation to be the owner of the mark sought to be registered; that no other person, firm, corporation or association, to the best of his knowledge and belief, has the right to use said mark in the United States, either in the identical form or in any such near resemblance thereto as might be calculated to deceive; that said mark is used by said corporation in commerce among the several States of the United States, and between the United States and foreign nations or Indian tribes, and particularly with Canada; that the description and drawing presented truly represent the mark sought to be registered; that the facsimiles show the mark as actually used upon the goods, and that the mark has been in actual use as a trade-mark of the applicant and applicant's predecessors from whom title was derived, for ten years next preceding February 20, 1905, and that to the best of his knowledge and belief, such use has been exclusive.

GEORGE W. MIXTER.

Sworn and subscribed to before me, a notary public, this 3rd day of October, 1911.

[L. S.] P. C. SIMMON,
Notary Public.

Copies of this trade-mark may be obtained for five cents each, by addressing the "Commissioner of Patents, Washington, D. C."

Re-renewed June 3, 1953, to Deere & Company, of Moline, Illinois, a corporation of Illinois.

Int. Cl.: 7

Prior U.S. Cls.: 13, 19, 21, 23, 31, 34, and 35

Reg. No. 2,729,766

United States Patent and Trademark Office

Registered June 24, 2003

TRADEMARK
PRINCIPAL REGISTER

DEERE & COMPANY (DELAWARE CORPORATION)
ONE JOHN DEERE PLACE
MOLINE, IL 61265

FOR: AGRICULTURAL MACHINES, NAMELY, PLOWS, CULTIVATORS, HARROWS, REAPERS, GRAIN HARVESTERS, HAY RAKES, STACKERS, UNLOADERS, FORKS, POWER CORN, COTTON, POTATO, SEED PLANTERS, POWER BROADCAST SEEDERS, GRAIN DRILLS, POTATO DIGGERS, MANURE SPREADERS, FERTILIZER DISTRIBUTORS, SPRAYING MACHINES, STALK CUTTERS, SURFACE GRADERS, CORN HARVESTERS AND HUSKERS, CORN SHELLERS, FEED GRINDERS, ENSILAGE CUTTERS, FEED CUTTERS, LAWN MOWERS AND REEL MOWER VEHICLES, CLOD CRUSHERS, SOIL PULVERIZERS, LAND ROLLERS, SPRAYING AND FARM PUMPS, COMBINES; EARTH-MOVING MACHINES, NAMELY, LOGGING, LANDSHAPING AND LAND-CLEARING MACHINES, LOADERS, SKID STEER LOADERS, LOADER BACKHOES, BULLDOZERS, EXCAVATORS, SCRAPERS; WOOD SAWING MACHINES; HIGH PRESSURE SPRAY-TYPE WASHING MACHINE FOR SPRAYING WATER, DETERGENTS AND OTHER LIQUIDS; SNOW BLOWERS AND SNOW THROWERS; CHAIN SAWS; POSTHOLE DIGGERS; AND GASOLINE AND DIESEL INTERNAL COMBUSTION ENGINES FOR THE AFOREMENTIONED MACHINES, IN CLASS 7 (U.S. CLS. 13, 19, 21, 23, 31, 34 AND 35).

FIRST USE 11-1-2000; IN COMMERCE 11-1-2000.

SN 76-095,359, FILED 7-19-2000.

MARC LEIPZIG, EXAMINING ATTORNEY

UNITED STATES INTERNATIONAL TRADE COMMISSION
Washington, D.C.

In the Matter of CERTAIN AGRICULTURAL VEHICLES AND COMPONENTS THEREOF	Inv. No. 337-TA-487

LIMITED EXCLUSION ORDER
(AGRICULTURAL TRACTORS)

The Commission has determined in this investigation that there is a violation of Section 337 of the Tariff Act of 1930 (19 U.S.C. § 1337) in the unlawful importation, sale for importation and/or sale after importation of certain agricultural vehicles thereof that infringe U.S. Trademark Registration Nos. 1,254,339; 1,502,103; 1,503,576; 91,860; and 2,729,766.

Having reviewed the record in this investigation, including the written submissions of the parties, the Commission has made its determination on the issues of remedy, the public interest, and bonding. The Commission has determined that the appropriate form of relief in this investigation is a general exclusion order directed to self-propelled forage harvesters, and limited exclusion orders directed to telehandlers and agricultural tractors, respectively. The Commission has also determined to issue cease and desist orders against certain respondents with respect to self-propelled forage harvesters and agricultural tractors.

The Commission has further determined that the public interest factors enumerated in 19 U.S.C. § 1337 (d) and (f) do not preclude issuance of the exclusion orders or the cease and desist orders, and that the bond during the Presidential review period shall be in the amount of ninety (90) percent of the entered value of any imported infringing agricultural vehicles.

The general exclusion order, limited exclusion orders, and cease and desist orders are being issued as separate orders. The limited exclusion order regarding agricultural tractors is set out below.

The Commission hereby **ORDERS** that:

1. Agricultural tractors that infringe one or more of the following federally-registered U.S. trademarks:

   U.S. Reg. No. 1,254,339;

   U.S. Reg. No. 1,502,103; and

   U.S. Reg. No. 1,503,576,[1]

   and that are manufactured abroad by or on behalf of, or are imported by or on behalf of, China America Imports, Lenar Equipment LLC, Pacific Avenue Equipment, SamTrac Tractor and Equipment, or Task Master Equipment LLC/ Tractors Etc., or any of their affiliated companies, parents, subsidiaries, contractors, licensees, or other related business entities, or their successors or assigns, are excluded from entry for consumption into the United States, entry for consumption from a foreign-trade zone, or withdrawal from warehouse for consumption, except if imported by, under license from, or with the permission of the trademark owner, or as provided by law, until such date as the trademarks are abandoned, canceled, or rendered invalid or unenforceable.

---

[1] Copies of these registrations are attached.

2. Notwithstanding paragraphs 1 of this Order, the aforesaid agricultural tractors are entitled to entry for consumption into the United States, entry for consumption from a foreign-trade zone, or withdrawal from warehouse for consumption, under bond in the amount of ninety (90) percent of entered value pursuant to subsection (j) of section 337 of the Tariff Act of 1930, as amended, 19 U.S.C. § 1337(j), from the day after this Order is received by the President until such time as the President notifies the Commission that he approves or disapproves this action but, in any event, not later than sixty (60) days after the date of receipt of this action.

3. In accordance with 19 U.S.C. § 1337(l), the provisions of this Order shall not apply to agricultural tractors that are imported by and for the use of the United States, or imported for, and to be used for, the United States with the authorization or consent of the Government.

4. Complainant Deere & Company shall file a written statement with the Commission, made under oath, each year on the anniversary of the issuance of this Order stating whether Deere & Company continues to use each of the aforesaid trademarks in commerce in the United States in connection with agricultural tractors and whether any of the aforesaid trademarks has been abandoned, canceled, or rendered invalid or unenforceable.

5. The Commission may modify this Order in accordance with the procedures described in Rule 210.76 of the Commission's Rules of Practice and Procedure, 19 C.F.R. § 210.76.

6. The Secretary shall serve copies of this Order upon each party of record in this investigation and upon the Department of Health and Human Services, the Department of Justice, the Federal Trade Commission, and the U.S. Bureau of Customs and Border Protection.

7. Notice of this Order shall be published in the *Federal Register*.

By Order of the Commission.

Marilyn R. Abbott
Secretary

Issued: May 14, 2004

Int. Cls.: 7 and 12

Prior U.S. Cls.: 19 and 23

United States Patent and Trademark Office

Reg. No. 1,254,339
Registered Oct. 18, 1983

TRADEMARK
Principal Register

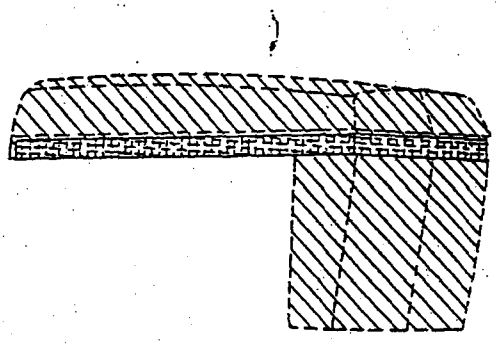

Deere & Company (Delaware corporation)
John Deere Rd.
Moline, Ill. 61265

For: AGRICULTURAL AND LAWN CARE MACHINES—NAMELY, BALERS, WINDROWERS, MOWER-CONDITIONERS, FORAGE HARVESTERS, SEEDERS, COMBINES, SPRAYERS, BEET HARVESTERS, COTTON HARVESTERS, HAY STACKING MACHINES AND LAWN MOWERS, in CLASS 7 (U.S. Cl. 23).

First use 1968; in commerce 1968.

For: TRACTORS AND POWER-OPERATED CARTS FOR CARRYING GRAIN, in CLASS 12 (U.S. Cl. 19).

First use 1956; in commerce 1956.

The drawing is lined for the colors green and yellow.

The mark consists of a horizontal yellow stripe on a green machine hood or panel.

The configuration of a machine hood is shown by dotted lines in the drawing and does not form a part of the mark.

Sec. 2(f).

Ser. No. 357,211, filed Mar. 29, 1982.

JEFFERSON FRIDAY, Examining Attorney

Int. Cl.: 12

Prior U.S. Cl.: 19

United States Patent and Trademark Office

Reg. No. 1,502,103
Registered Aug. 30, 1988

TRADEMARK
PRINCIPAL REGISTER

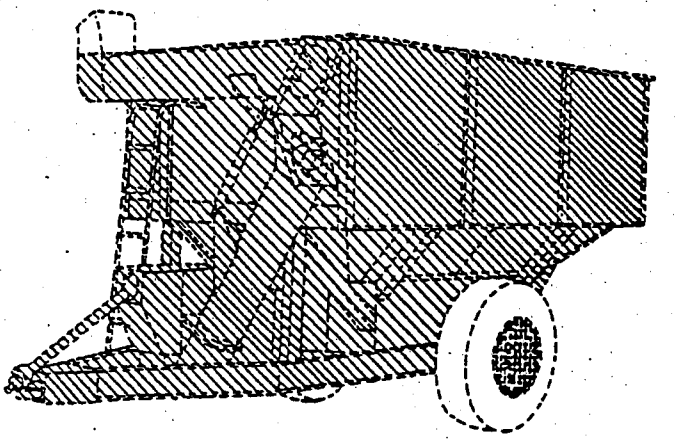

DEERE & COMPANY (DELAWARE CORPORATION)
JOHN DEERE ROAD
MOLINE, IL 61265

FOR: AGRICULTURAL TRACTORS, LAWN AND GARDEN TRACTORS, TRAILERS, WAGONS, AND CARTS, IN CLASS 12 (U.S. CL. 19).

FIRST USE 12-31-1918; IN COMMERCE 12-31-1918.

OWNER OF U.S. REG. NOS. 1,254,339 AND 1,296,442.

THE DRAWING IS LINED FOR A BRIGHT GREEN COLOR, SOMETIMES KNOWN AS "JOHN DEERE" GREEN, AND A BRIGHT YELLOW COLOR, AND CLAIM IS MADE FOR SUCH COLORS.

THE MARK CONSISTS OF A GREEN VEHICLE BODY OR FRAME WITH YELLOW WHEELS. THE CONFIGURATION OF A GRAIN CART IS SHOWN IN DOTTED LINES IN THE DRAWINGS FOR ILLUSTRATIVE PURPOSES ONLY AND DOES NOT FORM A PART OF THE MARK.

SEC. 2(F).

SER. NO. 574,308, FILED 12-19-1985.

DAVID H. STINE, EXAMINING ATTORNEY

Int. Cl.: 7

Prior U.S. Cl.: 23

United States Patent and Trademark Office

Reg. No. 1,503,576

Registered Sep. 13, 1988

TRADEMARK
PRINCIPAL REGISTER

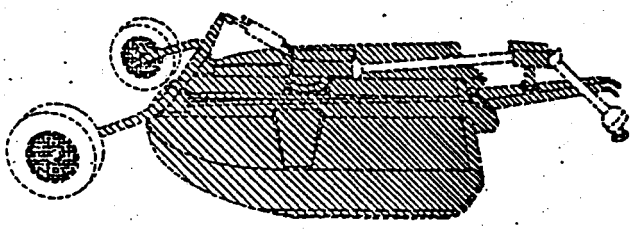

DEERE & COMPANY (DELAWARE CORPORATION)
JOHN DEERE ROAD
MOLINE, IL 61265

FOR: WHEELED AGRICULTURAL, LAWN AND GARDEN, AND MATERIAL HANDLING MACHINES, NAMELY, TILLAGE MACHINES, HAYING MACHINES, HARVESTING MACHINES, MOWERS, CUTTERS, SHREDDERS, SPRAYERS, LOADERS, SPREADERS, PLANTING MACHINES, AND SNOW REMOVAL MACHINES, IN CLASS 7 (U.S. CL. 23).

FIRST USE 12-31-1905; IN COMMERCE 12-31-1905.

OWNER OF U.S. REG. NOS. 1,254,339 AND 1,296,442.

THE DRAWING IS LINED FOR A BRIGHT GREEN COLOR, AND A BRIGHT YELLOW COLOR, AND CLAIM IS MADE FOR SUCH COLORS.

SEC. 2(F).

SER. NO. 574,301, FILED 12-19-1985.

DAVID H. STINE, EXAMINING ATTORNEY

UNITED STATES INTERNATIONAL TRADE COMMISSION
Washington, D.C.

In the Matter of CERTAIN AGRICULTURAL VEHICLES AND COMPONENTS THEREOF	Inv. No. 337-TA-487

ORDER TO CEASE AND DESIST

IT IS HEREBY ORDERED THAT SamTrac Tractor & Equipment, 3199 Plummers Lane, No. 13, Chico, CA 95973, cease and desist from conducting any of the following activities in the United States: importing, selling, advertising, distributing, marketing, consigning, transferring (except for exportation), offering for sale or soliciting U.S. agents or distributors for certain agricultural vehicles, as described below, in violation of Section 337 of the Tariff Act of 1930, as amended, 19 U.S.C. § 1337, except as provided in Section IV.

I.

(Definitions)

As used in this Order:

(A) "Commission" shall mean the United States International Trade Commission.

(B) "Deere" shall mean Deere & Company, One John Deere Place, Moline, Illinois 61250, complainant in this investigation, and its successors and assigns.

(C) "Respondent" shall mean SamTrac Tractor & Equipment, 3199 Plummers Lane, No. 13, Chico, CA 95973.

(D) "Person" shall mean an individual, or any non-governmental partnership, firm, association, corporation, or other legal or business entity other than Respondent or its majority owned or controlled subsidiaries, their successors, or assigns.

(F) "United States" shall mean the fifty States, the District of Columbia, and Puerto Rico.

(G) The terms "import" and "importation" refer to importation for entry for consumption, entry for consumption from a foreign-trade zone, and withdrawal from warehouse for consumption under the Customs laws of the United States.

(H) The term "covered product" shall mean agricultural tractors that are manufactured abroad by or on behalf of, or are imported by or on behalf of, Respondent, that infringe the following federally-registered U.S. trademarks: U.S. Reg. No.1,254,339; U.S. Reg. No. 1,502,103; or U.S. Reg. No. 1,503,576, and that are not imported by, under license from, or with the permission of the trademark owner, or as provided by law.

II.

(Applicability)

The provisions of this Cease and Desist Order shall apply to Respondent and to any of its principals, stockholders, officers, directors, employees, agents, licensees, distributors, contractors, controlled (whether by stock ownership or otherwise) and/or majority owned business entities, successors, and assigns, and to each of them, insofar as they are engaging in conduct prohibited by Section III, *infra*, for, with, or otherwise on behalf of Respondent.

III.

(Conduct Prohibited)

The following conduct of the Respondent in the United States is prohibited by the Order. Until such date on which the trademarks identified in Section I(H) above are abandoned, canceled, or rendered invalid or unenforceable, Respondent shall not:

(A) import or sell for importation into the United States covered products except under license of the trademark owner;

(B) market, distribute, offer for sale, sell, or otherwise transfer (except for exportation), in the United States imported covered products except under license of the trademark owner;

(C) advertise imported covered products except under license of the trademark owner;

(D) solicit U.S. agents or distributors for imported covered products except under license of the trademark owner; or

(E) aid or abet other entities in the importation, sale for importation, sale after importation, transfer, or distribution of covered products in the United States except under license of the trademark owner.

IV.

(Conduct Permitted)

Notwithstanding any other provision of this Order, specific conduct otherwise prohibited by the terms of this Order shall be permitted if, in a written instrument, the owner of U.S. Trademark Registration Nos. 1,254,339; 1,502,103; and 1,503,576, licenses or authorizes such specific conduct, or such specific conduct is related to the importation or sale of covered products by or for the United States.

V.

(Reporting)

For purposes of this reporting requirement, the reporting periods shall commence on January 1 of each year and shall end on the subsequent December 31. However, the first report required under this section shall cover the period from the date of issuance of this Order through December 31, 2004. This reporting requirement shall continue in force until such time as Respondent will

have truthfully reported, in two consecutive timely filed reports, that it has no inventory of covered products in the United States.

Within thirty (30) days of the last day of the reporting period, Respondent shall report to the Commission the quantity in units and the value in dollars of covered products that the Respondent has imported or sold in the United States after importation during the reporting period and the quantity in units and value in dollars of reported covered products that remain in inventory in the United States at the end of the reporting period.

Any failure to make the required report or the filing of any false or inaccurate report shall constitute a violation of this Order, and the submission of a false or inaccurate report may be referred to the U.S. Department of Justice as a possible criminal violation of 18 U.S.C. § 1001.

VI.

(Record Keeping and Inspection)

(A) For the purpose of securing compliance with this Order, Respondent shall retain any and all records relating to the sale, offer for sale, marketing, or distribution in the United States of covered products, made and received in the usual and ordinary course of business, whether in detail or in summary form, for a period of two (2) years from the close of the fiscal year to which they pertain.

(B) For the purposes of determining or securing compliance with this Order and for no other purpose, and subject to any privilege recognized by the

federal courts of the United States, duly authorized representatives of the Commission, upon reasonable written notice by the Commission or its staff, shall be permitted access and the right to inspect and copy in Respondent's principal office during office hours, and in the presence of counsel or other representatives if Respondent so chooses, all books, ledgers, accounts, correspondence, memoranda, and other records and documents, both in detail and in summary form as are required to be retained by subparagraph VI(A) of this Order.

VII.

(Service of Cease and Desist Order)

Respondent is ordered and directed to:

(A) Serve, within fifteen (15) days after the effective date of this Order, a copy of this Order upon each of its respective officers, directors, managing agents, agents, and employees who have any responsibility for the importation, marketing, distribution, or sale of imported covered products in the United States;

(B) Serve, within fifteen (15) days after the succession of any persons referred to in subparagraph VII (A) of this Order, a copy of the Order upon each successor; and

(C) Maintain such records as will show the name, title, and address of each person upon whom the Order has been served, as described in subparagraphs VII(A) and VII(B) of this Order, together with the date on which service was made.

The obligations set forth in subparagraphs VII(B) and VII(C) shall remain in effect until such date on which the trademarks described in Section I(H) herein are abandoned, canceled, or rendered invalid or unenforceable.

VIII.

(Confidentiality)

Any request for confidential treatment of information obtained by the Commission pursuant to Sections V and VI of the Order should be in accordance with section 201.6 of the Commission Rules of Practice and Procedure, 19 C.F.R. § 201.6. For all reports for which confidential treatment is sought, Respondent must provide a public version of such report with confidential information redacted.

IX.

(Enforcement)

Violation of this Order may result in any of the actions specified in section 210.75 of the Commission's Rules of Practice and Procedure, 19 C.F.R. § 210.75, including an action for civil penalties in accordance with section 337(f) of the Tariff Act of 1930, 19 U.S.C. § 1337(f), and any other action as the Commission may deem appropriate. In determining whether Respondent is in violation of this Order, the Commission may infer facts adverse to Respondent if Respondent fails to provide adequate or timely information.

X.

(Modification)

The Commission may amend this Order on its own motion or in accordance with the procedure described in section 210.76 of the Commission's Rules of Practice and Procedure, 19 C.F.R. § 210.76.

XI.

(Bonding)

The conduct prohibited by Section III of this Order may be continued during the sixty (60) day period in which this Order is under review by the President pursuant to section 337(j) of the Tariff Act of 1930, 19 U.S.C. § 1337(j), subject to Respondent posting a bond in the amount of ninety (90) percent of the entered value of the covered products. This bond provision does not apply to conduct that is otherwise permitted by Section IV of this Order. Covered products imported on or after the date of issuance of this order are subject to the entry bond as set forth in the limited exclusion order issued by the Commission, and are not subject to this bond provision.

The bond is to be posted in accordance with the procedures established by the Commission for the posting of bonds by complainants in connection with the issuance of temporary exclusion orders. *See* Commission Rule 210.68, 19 C.F.R. § 210.68. The bond and any accompanying documentation is to be provided to

and approved by the Commission prior to the commencement of conduct which is otherwise prohibited by Section III of this Order.

The bond is to be forfeited in the event that the President approves, or does not disapprove within the Presidential review period, this Order, unless the U.S. Court of Appeals for the Federal Circuit, in a final judgment, reverses any Commission final determination and order as to Respondent on appeal, or unless Respondent exports the products subject to this bond or destroys them and provides certification to that effect satisfactory to the Commission.

The bond is to be released in the event the President disapproves this Order and no subsequent order is issued by the Commission and approved, or not disapproved, by the President, upon service on Respondent of an order issued by the Commission based upon application therefore made by Respondent to the Commission.

By Order of the Commission.

Marilyn R. Abbott
Secretary

Issued: May 14, 2004

Int. Cls.: 7 and 12

Prior U.S. Cls.: 19 and 23

United States Patent and Trademark Office

Reg. No. 1,254,339
Registered Oct. 18, 1983

TRADEMARK
Principal Register

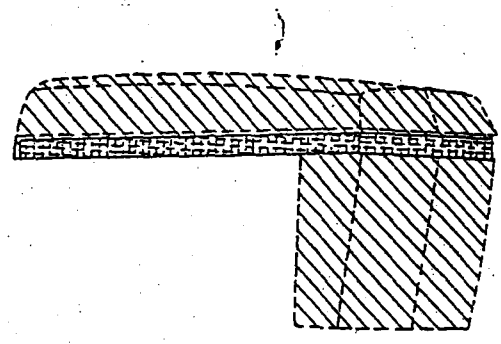

Deere & Company (Delaware corporation)
John Deere Rd.
Moline, Ill. 61265

For: AGRICULTURAL AND LAWN CARE MACHINES—NAMELY, BALERS, WINDROWERS, MOWER-CONDITIONERS, FORAGE HARVESTERS, SEEDERS, COMBINES, SPRAYERS, BEET HARVESTERS, COTTON HARVESTERS, HAY STACKING MACHINES AND LAWN MOWERS, in CLASS 7 (U.S. Cl. 23).

First use 1968; in commerce 1968.

For: TRACTORS AND POWER-OPERATED CARTS FOR CARRYING GRAIN, in CLASS 12 (U.S. Cl. 19).

First use 1956; in commerce 1956.

The drawing is lined for the colors green and yellow.

The mark consists of a horizontal yellow stripe on a green machine hood or panel.

The configuration of a machine hood is shown by dotted lines in the drawing and does not form a part of the mark.

Sec. 2(f).

Ser. No. 357,211, filed Mar. 29, 1982.

JEFFERSON FRIDAY, Examining Attorney

Int. Cl.: 12

Prior U.S. Cl.: 19

United States Patent and Trademark Office

Reg. No. 1,502,103

Registered Aug. 30, 1988

TRADEMARK
PRINCIPAL REGISTER

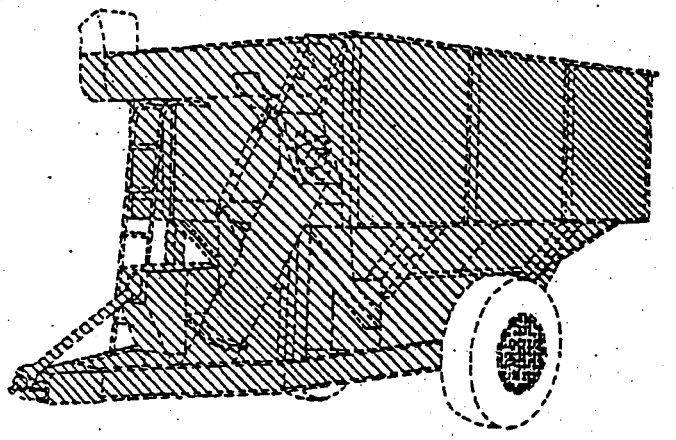

DEERE & COMPANY (DELAWARE CORPORATION)
JOHN DEERE ROAD
MOLINE, IL 61265

FOR: AGRICULTURAL TRACTORS, LAWN AND GARDEN TRACTORS, TRAILERS, WAGONS, AND CARTS, IN CLASS 12 (U.S. CL. 19).

FIRST USE 12-31-1918; IN COMMERCE 12-31-1918.

OWNER OF U.S. REG. NOS. 1,254,339 AND 1,296,442.

THE DRAWING IS LINED FOR A BRIGHT GREEN COLOR, SOMETIMES KNOWN AS "JOHN DEERE" GREEN, AND A BRIGHT YELLOW COLOR, AND CLAIM IS MADE FOR SUCH COLORS.

THE MARK CONSISTS OF A GREEN VEHICLE BODY OR FRAME WITH YELLOW WHEELS. THE CONFIGURATION OF A GRAIN CART IS SHOWN IN DOTTED LINES IN THE DRAWINGS FOR ILLUSTRATIVE PURPOSES ONLY AND DOES NOT FORM A PART OF THE MARK.

SEC. 2(F).

SER. NO. 574,308, FILED 12-19-1985.

DAVID H. STINE, EXAMINING ATTORNEY

Int. Cl.: 7

Prior U.S. Cl.: 23

Reg. No. 1,503,576

United States Patent and Trademark Office

Registered Sep. 13, 1988

TRADEMARK
PRINCIPAL REGISTER

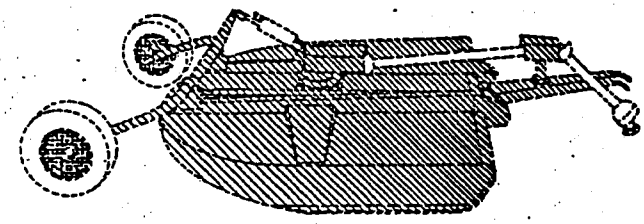

DEERE & COMPANY (DELAWARE CORPORATION)
JOHN DEERE ROAD
MOLINE, IL 61265

FOR: WHEELED AGRICULTURAL, LAWN AND GARDEN, AND MATERIAL HANDLING MACHINES, NAMELY, TILLAGE MACHINES, HAYING MACHINES, HARVESTING MACHINES, MOWERS, CUTTERS, SHREDDERS, SPRAYERS, LOADERS, SPREADERS, PLANTING MACHINES, AND SNOW REMOVAL MACHINES, IN CLASS 7 (U.S. CL. 23).

FIRST USE 12-31-1905; IN COMMERCE 12-31-1905.

OWNER OF U.S. REG. NOS. 1,254,339 AND 1,296,442.

THE DRAWING IS LINED FOR A BRIGHT GREEN COLOR, AND A BRIGHT YELLOW COLOR, AND CLAIM IS MADE FOR SUCH COLORS.

SEC. 2(F).

SER. NO. 574,301, FILED 12-19-1985.

DAVID H. STINE, EXAMINING ATTORNEY

UNITED STATES INTERNATIONAL TRADE COMMISSION
Washington, D.C.

In the Matter of CERTAIN AGRICULTURAL VEHICLES AND COMPONENTS THEREOF	Inv. No. 337-TA-487

ORDER TO CEASE AND DESIST

IT IS HEREBY ORDERED THAT Pacific Avenue Equipment, 1015 Pacific Avenue, Yakima, WA 98901, cease and desist from conducting any of the following activities in the United States: importing, selling, advertising, distributing, marketing, consigning, transferring (except for exportation), offering for sale or soliciting U.S. agents or distributors for certain agricultural vehicles, as described below, in violation of Section 337 of the Tariff Act of 1930, as amended, 19 U.S.C. § 1337, except as provided in Section IV.

I.

(Definitions)

As used in this Order:

(A) "Commission" shall mean the United States International Trade Commission.

(B) "Deere" shall mean Deere & Company, One John Deere Place, Moline, Illinois 61250, complainant in this investigation, and its successors and assigns.

(C) "Respondent" shall mean Pacific Avenue Equipment, 1015 Pacific Avenue, Yakima, WA 98901.

(D) "Person" shall mean an individual, or any non-governmental partnership, firm, association, corporation, or other legal or business entity other than Respondent or its majority owned or controlled subsidiaries, their successors, or assigns.

(F) "United States" shall mean the fifty States, the District of Columbia, and Puerto Rico.

(G) The terms "import" and "importation" refer to importation for entry for consumption, entry for consumption from a foreign-trade zone, and withdrawal from warehouse for consumption under the Customs laws of the United States.

(H) The term "covered product" shall mean agricultural tractors that are manufactured abroad by or on behalf of, or are imported by or on behalf of, Respondent, that infringe the following federally-registered U.S. trademarks: U.S. Reg. No.1,254,339; U.S. Reg. No. 1,502,103; or U.S. Reg. No. 1,503,576, and that are not imported by, under license from, or with the permission of the trademark owner, or as provided by law.

II.

(Applicability)

The provisions of this Cease and Desist Order shall apply to Respondent and to any of its principals, stockholders, officers, directors, employees, agents, licensees, distributors, contractors, controlled (whether by stock ownership or otherwise) and/or majority owned business entities, successors, and assigns, and to each of them, insofar as they are engaging in conduct prohibited by Section III, *infra*, for, with, or otherwise on behalf of Respondent.

III.

(Conduct Prohibited)

The following conduct of the Respondent in the United States is prohibited by the Order. Until such date on which the trademarks identified in Section I(H) above are abandoned, canceled, or rendered invalid or unenforceable, Respondent shall not:

(A) import or sell for importation into the United States covered products except under license of the trademark owner;

(B) market, distribute, offer for sale, sell, or otherwise transfer (except for exportation), in the United States imported covered products except under license of the trademark owner;

(C) advertise imported covered products except under license of the trademark owner;

(D) solicit U.S. agents or distributors for imported covered products except under license of the trademark owner; or

(E) aid or abet other entities in the importation, sale for importation, sale after importation, transfer, or distribution of covered products in the United States except under license of the trademark owner.

IV.

(Conduct Permitted)

Notwithstanding any other provision of this Order, specific conduct otherwise prohibited by the terms of this Order shall be permitted if, in a written instrument, the owner of U.S. Trademark Registration Nos. 1,254,339; 1,502,103; and 1,503,576, licenses or authorizes such specific conduct, or such specific conduct is related to the importation or sale of covered products by or for the United States.

V.

(Reporting)

For purposes of this reporting requirement, the reporting periods shall commence on January 1 of each year and shall end on the subsequent December 31. However, the first report required under this section shall cover the period from the date of issuance of this Order through December 31, 2004. This reporting requirement shall continue in force until such time as Respondent will

have truthfully reported, in two consecutive timely filed reports, that it has no inventory of covered products in the United States.

Within thirty (30) days of the last day of the reporting period, Respondent shall report to the Commission the quantity in units and the value in dollars of covered products that the Respondent has imported or sold in the United States after importation during the reporting period and the quantity in units and value in dollars of reported covered products that remain in inventory in the United States at the end of the reporting period.

Any failure to make the required report or the filing of any false or inaccurate report shall constitute a violation of this Order, and the submission of a false or inaccurate report may be referred to the U.S. Department of Justice as a possible criminal violation of 18 U.S.C. § 1001.

VI.

(Record Keeping and Inspection)

(A) For the purpose of securing compliance with this Order, Respondent shall retain any and all records relating to the sale, offer for sale, marketing, or distribution in the United States of covered products, made and received in the usual and ordinary course of business, whether in detail or in summary form, for a period of two (2) years from the close of the fiscal year to which they pertain.

(B) For the purposes of determining or securing compliance with this Order and for no other purpose, and subject to any privilege recognized by the

federal courts of the United States, duly authorized representatives of the Commission, upon reasonable written notice by the Commission or its staff, shall be permitted access and the right to inspect and copy in Respondent's principal office during office hours, and in the presence of counsel or other representatives if Respondent so chooses, all books, ledgers, accounts, correspondence, memoranda, and other records and documents, both in detail and in summary form as are required to be retained by subparagraph VI(A) of this Order.

VII.

(Service of Cease and Desist Order)

Respondent is ordered and directed to:

(A) Serve, within fifteen (15) days after the effective date of this Order, a copy of this Order upon each of its respective officers, directors, managing agents, agents, and employees who have any responsibility for the importation, marketing, distribution, or sale of imported covered products in the United States;

(B) Serve, within fifteen (15) days after the succession of any persons referred to in subparagraph VII (A) of this Order, a copy of the Order upon each successor; and

(C) Maintain such records as will show the name, title, and address of each person upon whom the Order has been served, as described in subparagraphs VII(A) and VII(B) of this Order, together with the date on which service was made.

The obligations set forth in subparagraphs VII(B) and VII(C) shall remain in effect until such date on which the trademarks described in Section I(H) herein are abandoned, canceled, or rendered invalid or unenforceable.

VIII.

(Confidentiality)

Any request for confidential treatment of information obtained by the Commission pursuant to Sections V and VI of the Order should be in accordance with section 201.6 of the Commission Rules of Practice and Procedure, 19 C.F.R. § 201.6. For all reports for which confidential treatment is sought, Respondent must provide a public version of such report with confidential information redacted.

IX.

(Enforcement)

Violation of this Order may result in any of the actions specified in section 210.75 of the Commission's Rules of Practice and Procedure, 19 C.F.R. § 210.75, including an action for civil penalties in accordance with section 337(f) of the Tariff Act of 1930, 19 U.S.C. § 1337(f), and any other action as the Commission may deem appropriate. In determining whether Respondent is in violation of this Order, the Commission may infer facts adverse to Respondent if Respondent fails to provide adequate or timely information.

X.

(Modification)

The Commission may amend this Order on its own motion or in accordance with the procedure described in section 210.76 of the Commission's Rules of Practice and Procedure, 19 C.F.R. § 210.76.

XI.

(Bonding)

The conduct prohibited by Section III of this Order may be continued during the sixty (60) day period in which this Order is under review by the President pursuant to section 337(j) of the Tariff Act of 1930, 19 U.S.C. § 1337(j), subject to Respondent posting a bond in the amount of ninety (90) percent of the entered value of the covered products. This bond provision does not apply to conduct that is otherwise permitted by Section IV of this Order. Covered products imported on or after the date of issuance of this order are subject to the entry bond as set forth in the limited exclusion order issued by the Commission, and are not subject to this bond provision.

The bond is to be posted in accordance with the procedures established by the Commission for the posting of bonds by complainants in connection with the issuance of temporary exclusion orders. *See* Commission Rule 210.68, 19 C.F.R. § 210.68. The bond and any accompanying documentation is to be provided to

and approved by the Commission prior to the commencement of conduct which is otherwise prohibited by Section III of this Order.

The bond is to be forfeited in the event that the President approves, or does not disapprove within the Presidential review period, this Order, unless the U.S. Court of Appeals for the Federal Circuit, in a final judgment, reverses any Commission final determination and order as to Respondent on appeal, or unless Respondent exports the products subject to this bond or destroys them and provides certification to that effect satisfactory to the Commission.

The bond is to be released in the event the President disapproves this Order and no subsequent order is issued by the Commission and approved, or not disapproved, by the President, upon service on Respondent of an order issued by the Commission based upon application therefore made by Respondent to the Commission.

By Order of the Commission.

Marilyn R. Abbott
Secretary

Issued: May 14, 2004

Int. Cls.: 7 and 12

Prior U.S. Cls.: 19 and 23

United States Patent and Trademark Office

Reg. No. 1,254,339

Registered Oct. 18, 1983

TRADEMARK

Principal Register

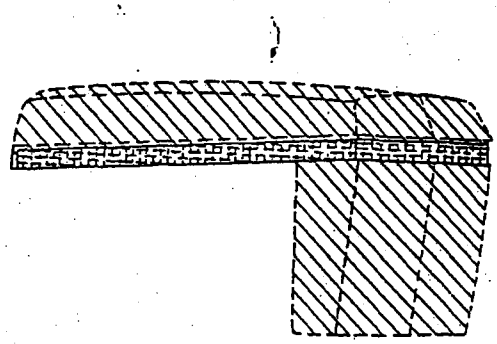

Deere & Company (Delaware corporation)
John Deere Rd.
Moline, Ill. 61265

For: AGRICULTURAL AND LAWN CARE MACHINES—NAMELY, BALERS, WINDROWERS, MOWER-CONDITIONERS, FORAGE HARVESTERS, SEEDERS, COMBINES, SPRAYERS, BEET HARVESTERS, COTTON HARVESTERS, HAY STACKING MACHINES AND LAWN MOWERS, in CLASS 7 (U.S. Cl. 23).

First use 1968; in commerce 1968.

For: TRACTORS AND POWER-OPERATED CARTS FOR CARRYING GRAIN, in CLASS 12 (U.S. Cl. 19).

First use 1956; in commerce 1956.

The drawing is lined for the colors green and yellow.

The mark consists of a horizontal yellow stripe on a green machine hood or panel.

The configuration of a machine hood is shown by dotted lines in the drawing and does not form a part of the mark.

Sec. 2(f).

Ser. No. 357,211, filed Mar. 29, 1982.

JEFFERSON FRIDAY, Examining Attorney

Int. Cl.: 12

Prior U.S. Cl.: 19

United States Patent and Trademark Office

Reg. No. 1,502,103
Registered Aug. 30, 1988

TRADEMARK
PRINCIPAL REGISTER

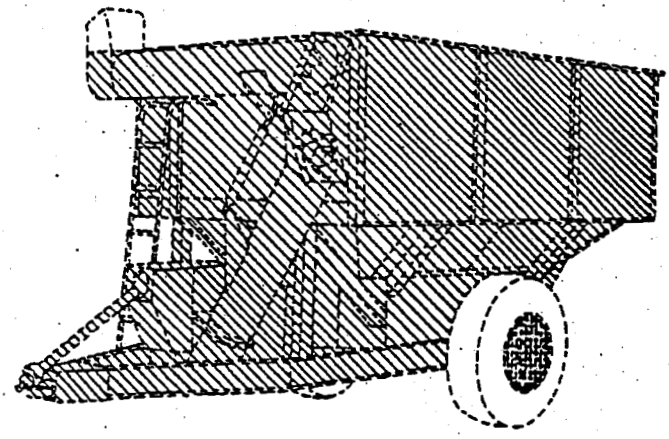

DEERE & COMPANY (DELAWARE CORPORATION)
JOHN DEERE ROAD
MOLINE, IL 61265

FOR: AGRICULTURAL TRACTORS, LAWN AND GARDEN TRACTORS, TRAILERS, WAGONS, AND CARTS, IN CLASS 12 (U.S. CL. 19).

FIRST USE 12-31-1918; IN COMMERCE 12-31-1918.

OWNER OF U.S. REG. NOS. 1,254,339 AND 1,296,442.

THE DRAWING IS LINED FOR A BRIGHT GREEN COLOR, SOMETIMES KNOWN AS "JOHN DEERE" GREEN, AND A BRIGHT YELLOW COLOR, AND CLAIM IS MADE FOR SUCH COLORS.

THE MARK CONSISTS OF A GREEN VEHICLE BODY OR FRAME WITH YELLOW WHEELS. THE CONFIGURATION OF A GRAIN CART IS SHOWN IN DOTTED LINES IN THE DRAWINGS FOR ILLUSTRATIVE PURPOSES ONLY AND DOES NOT FORM A PART OF THE MARK.

SEC. 2(F).

SER. NO. 574,308, FILED 12-19-1985.

DAVID H. STINE, EXAMINING ATTORNEY

Int. Cl.: 7

Prior U.S. Cl.: 23

United States Patent and Trademark Office

Reg. No. 1,503,576
Registered Sep. 13, 1988

TRADEMARK
PRINCIPAL REGISTER

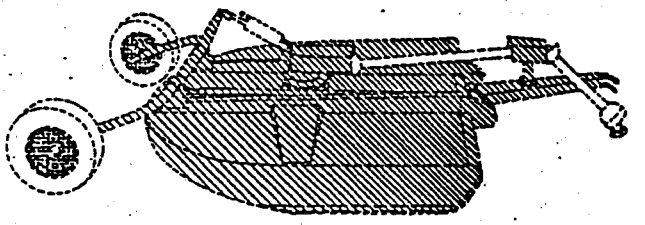

DEERE & COMPANY (DELAWARE CORPORATION)
JOHN DEERE ROAD
MOLINE, IL 61265

FOR: WHEELED AGRICULTURAL, LAWN AND GARDEN, AND MATERIAL HANDLING MACHINES, NAMELY, TILLAGE MACHINES, HAYING MACHINES, HARVESTING MACHINES, MOWERS, CUTTERS, SHREDDERS, SPRAYERS, LOADERS, SPREADERS, PLANTING MACHINES, AND SNOW REMOVAL MACHINES, IN CLASS 7 (U.S. CL. 23).

FIRST USE 12-31-1905; IN COMMERCE 12-31-1905.

OWNER OF U.S. REG. NOS. 1,254,339 AND 1,296,442.

THE DRAWING IS LINED FOR A BRIGHT GREEN COLOR, AND A BRIGHT YELLOW COLOR, AND CLAIM IS MADE FOR SUCH COLORS.

SEC. 2(F).

SER. NO. 574,301, FILED 12-19-1985.

DAVID H. STINE, EXAMINING ATTORNEY

UNITED STATES INTERNATIONAL TRADE COMMISSION
Washington, D.C.

In the Matter of CERTAIN AGRICULTURAL VEHICLES AND COMPONENTS THEREOF	Inv. No. 337-TA-487

ORDER TO CEASE AND DESIST

IT IS HEREBY ORDERED THAT Task Master Equipment LLC/Tractors Etc., 83969 N. Pacific Highway 99, Creswell, OR 97426, cease and desist from conducting any of the following activities in the United States: importing, selling, advertising, distributing, marketing, consigning, transferring (except for exportation), offering for sale or soliciting U.S. agents or distributors for certain agricultural vehicles, as described below, in violation of Section 337 of the Tariff Act of 1930, as amended, 19 U.S.C. § 1337, except as provided in Section IV.

I.

(Definitions)

As used in this Order:

(A) "Commission" shall mean the United States International Trade Commission.

(B) "Deere" shall mean Deere & Company, One John Deere Place, Moline, Illinois 61250, complainant in this investigation, and its successors and assigns.

(C) "Respondent" shall mean Task Master Equipment LLC/Tractors Etc., 83969 N. Pacific Highway 99, Creswell, OR 97426.

(D) "Person" shall mean an individual, or any non-governmental partnership, firm, association, corporation, or other legal or business entity other than Respondent or its majority owned or controlled subsidiaries, their successors, or assigns.

(F) "United States" shall mean the fifty States, the District of Columbia, and Puerto Rico.

(G) The terms "import" and "importation" refer to importation for entry for consumption, entry for consumption from a foreign-trade zone, and withdrawal from warehouse for consumption under the Customs laws of the United States.

(H) The term "covered product" shall mean agricultural tractors that are manufactured abroad by or on behalf of, or are imported by or on behalf of, Respondent, that infringe the following federally-registered U.S. trademarks: U.S. Reg. No.1,254,339; U.S. Reg. No. 1,502,103; or U.S. Reg. No. 1,503,576, and that are not imported by, under license from, or with the permission of the trademark owner, or as provided by law.

II.

(Applicability)

The provisions of this Cease and Desist Order shall apply to Respondent and to any of its principals, stockholders, officers, directors, employees, agents, licensees, distributors, contractors, controlled (whether by stock ownership or otherwise) and/or majority owned business entities, successors, and assigns, and to each of them, insofar as they are engaging in conduct prohibited by Section III, *infra*, for, with, or otherwise on behalf of Respondent.

III.

(Conduct Prohibited)

The following conduct of the Respondent in the United States is prohibited by the Order. Until such date on which the trademarks identified in Section I(H) above are abandoned, canceled, or rendered invalid or unenforceable, Respondent shall not:

(A) import or sell for importation into the United States covered products except under license of the trademark owner;

(B) market, distribute, offer for sale, sell, or otherwise transfer (except for exportation), in the United States imported covered products except under license of the trademark owner;

(C) advertise imported covered products except under license of the trademark owner;

(D) solicit U.S. agents or distributors for imported covered products except under license of the trademark owner; or

(E) aid or abet other entities in the importation, sale for importation, sale after importation, transfer, or distribution of covered products in the United States except under license of the trademark owner.

IV.

(Conduct Permitted)

Notwithstanding any other provision of this Order, specific conduct otherwise prohibited by the terms of this Order shall be permitted if, in a written instrument, the owner of U.S. Trademark Registration Nos. 1,254,339; 1,502,103; and 1,503,576, licenses or authorizes such specific conduct, or such specific conduct is related to the importation or sale of covered products by or for the United States.

V.

(Reporting)

For purposes of this reporting requirement, the reporting periods shall commence on January 1 of each year and shall end on the subsequent December 31. However, the first report required under this section shall cover the period from the date of issuance of this Order through December 31, 2004. This reporting requirement shall continue in force until such time as Respondent will

have truthfully reported, in two consecutive timely filed reports, that it has no inventory of covered products in the United States.

Within thirty (30) days of the last day of the reporting period, Respondent shall report to the Commission the quantity in units and the value in dollars of covered products that the Respondent has imported or sold in the United States after importation during the reporting period and the quantity in units and value in dollars of reported covered products that remain in inventory in the United States at the end of the reporting period.

Any failure to make the required report or the filing of any false or inaccurate report shall constitute a violation of this Order, and the submission of a false or inaccurate report may be referred to the U.S. Department of Justice as a possible criminal violation of 18 U.S.C. § 1001.

VI.

(Record Keeping and Inspection)

(A) For the purpose of securing compliance with this Order, Respondent shall retain any and all records relating to the sale, offer for sale, marketing, or distribution in the United States of covered products, made and received in the usual and ordinary course of business, whether in detail or in summary form, for a period of two (2) years from the close of the fiscal year to which they pertain.

(B) For the purposes of determining or securing compliance with this Order and for no other purpose, and subject to any privilege recognized by the

federal courts of the United States, duly authorized representatives of the Commission, upon reasonable written notice by the Commission or its staff, shall be permitted access and the right to inspect and copy in Respondent's principal office during office hours, and in the presence of counsel or other representatives if Respondent so chooses, all books, ledgers, accounts, correspondence, memoranda, and other records and documents, both in detail and in summary form as are required to be retained by subparagraph VI(A) of this Order.

VII.

(Service of Cease and Desist Order)

Respondent is ordered and directed to:

(A) Serve, within fifteen (15) days after the effective date of this Order, a copy of this Order upon each of its respective officers, directors, managing agents, agents, and employees who have any responsibility for the importation, marketing, distribution, or sale of imported covered products in the United States;

(B) Serve, within fifteen (15) days after the succession of any persons referred to in subparagraph VII (A) of this Order, a copy of the Order upon each successor; and

(C) Maintain such records as will show the name, title, and address of each person upon whom the Order has been served, as described in subparagraphs VII(A) and VII(B) of this Order, together with the date on which service was made.

The obligations set forth in subparagraphs VII(B) and VII(C) shall remain in effect until such date on which the trademarks described in Section I(H) herein are abandoned, canceled, or rendered invalid or unenforceable.

VIII.

(Confidentiality)

Any request for confidential treatment of information obtained by the Commission pursuant to Sections V and VI of the Order should be in accordance with section 201.6 of the Commission Rules of Practice and Procedure, 19 C.F.R. § 201.6. For all reports for which confidential treatment is sought, Respondent must provide a public version of such report with confidential information redacted.

IX.

(Enforcement)

Violation of this Order may result in any of the actions specified in section 210.75 of the Commission's Rules of Practice and Procedure, 19 C.F.R. § 210.75, including an action for civil penalties in accordance with section 337(f) of the Tariff Act of 1930, 19 U.S.C. § 1337(f), and any other action as the Commission may deem appropriate. In determining whether Respondent is in violation of this Order, the Commission may infer facts adverse to Respondent if Respondent fails to provide adequate or timely information.

X.

(Modification)

The Commission may amend this Order on its own motion or in accordance with the procedure described in section 210.76 of the Commission's Rules of Practice and Procedure, 19 C.F.R. § 210.76.

XI.

(Bonding)

The conduct prohibited by Section III of this Order may be continued during the sixty (60) day period in which this Order is under review by the President pursuant to section 337(j) of the Tariff Act of 1930, 19 U.S.C. § 1337(j), subject to Respondent posting a bond in the amount of ninety (90) percent of the entered value of the covered products. This bond provision does not apply to conduct that is otherwise permitted by Section IV of this Order. Covered products imported on or after the date of issuance of this order are subject to the entry bond as set forth in the limited exclusion order issued by the Commission, and are not subject to this bond provision.

The bond is to be posted in accordance with the procedures established by the Commission for the posting of bonds by complainants in connection with the issuance of temporary exclusion orders. *See* Commission Rule 210.68, 19 C.F.R. § 210.68. The bond and any accompanying documentation is to be provided to

and approved by the Commission prior to the commencement of conduct which is otherwise prohibited by Section III of this Order.

The bond is to be forfeited in the event that the President approves, or does not disapprove within the Presidential review period, this Order, unless the U.S. Court of Appeals for the Federal Circuit, in a final judgment, reverses any Commission final determination and order as to Respondent on appeal, or unless Respondent exports the products subject to this bond or destroys them and provides certification to that effect satisfactory to the Commission.

The bond is to be released in the event the President disapproves this Order and no subsequent order is issued by the Commission and approved, or not disapproved, by the President, upon service on Respondent of an order issued by the Commission based upon application therefore made by Respondent to the Commission.

By Order of the Commission.

Marilyn R. Abbott
Secretary

Issued: May 14, 2004

Int. Cls.: 7 and 12

Prior U.S. Cls.: 19 and 23

United States Patent and Trademark Office

Reg. No. 1,254,339

Registered Oct. 18, 1983

TRADEMARK

Principal Register

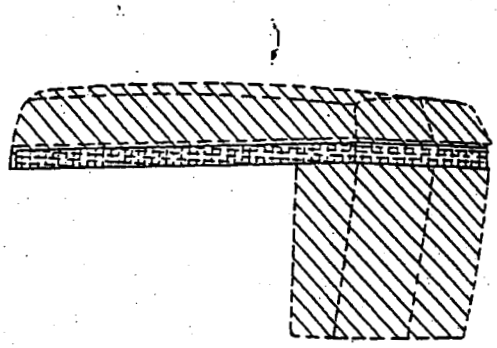

Deere & Company (Delaware corporation)
John Deere Rd.
Moline, Ill. 61265

For: AGRICULTURAL AND LAWN CARE MACHINES—NAMELY, BALERS, WINDROWERS, MOWER-CONDITIONERS, FORAGE HARVESTERS, SEEDERS, COMBINES, SPRAYERS, BEET HARVESTERS, COTTON HARVESTERS, HAY STACKING MACHINES AND LAWN MOWERS, in CLASS 7 (U.S. Cl. 23).

First use 1968; in commerce 1968.

For: TRACTORS AND POWER-OPERATED CARTS FOR CARRYING GRAIN, in CLASS 12 (U.S. Cl. 19).

First use 1956; in commerce 1956.

The drawing is lined for the colors green and yellow.

The mark consists of a horizontal yellow stripe on a green machine hood or panel.

The configuration of a machine hood is shown by dotted lines in the drawing and does not form a part of the mark.

Sec. 2(f).

Ser. No. 357,211, filed Mar. 29, 1982.

JEFFERSON FRIDAY, Examining Attorney

Int. Cl.: 12

Prior U.S. Cl.: 19

Reg. No. 1,502,103

United States Patent and Trademark Office

Registered Aug. 30, 1988

TRADEMARK
PRINCIPAL REGISTER

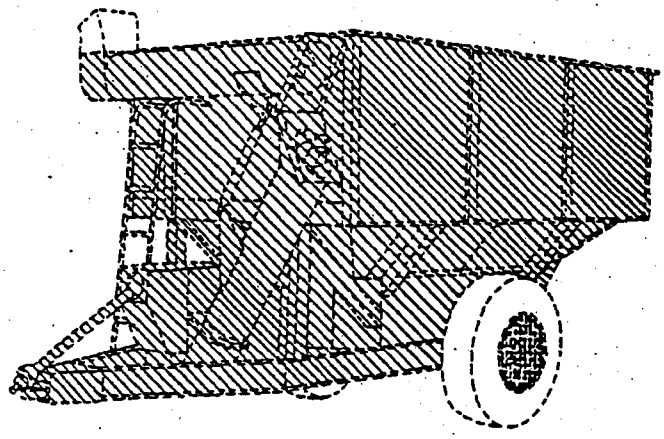

DEERE & COMPANY (DELAWARE CORPORATION)
JOHN DEERE ROAD
MOLINE, IL 61265

FOR: AGRICULTURAL TRACTORS, LAWN AND GARDEN TRACTORS, TRAILERS, WAGONS, AND CARTS, IN CLASS 12 (U.S. CL. 19).

FIRST USE 12-31-1918; IN COMMERCE 12-31-1918.

OWNER OF U.S. REG. NOS. 1,254,339 AND 1,296,442.

THE DRAWING IS LINED FOR A BRIGHT GREEN COLOR, SOMETIMES KNOWN AS "JOHN DEERE" GREEN, AND A BRIGHT YELLOW COLOR, AND CLAIM IS MADE FOR SUCH COLORS.

THE MARK CONSISTS OF A GREEN VEHICLE BODY OR FRAME WITH YELLOW WHEELS. THE CONFIGURATION OF A GRAIN CART IS SHOWN IN DOTTED LINES IN THE DRAWINGS FOR ILLUSTRATIVE PURPOSES ONLY AND DOES NOT FORM A PART OF THE MARK.

SEC. 2(F).

SER. NO. 574,308, FILED 12-19-1985.

DAVID H. STINE, EXAMINING ATTORNEY

Int. Cl.: 7

Prior U.S. Cl.: 23

United States Patent and Trademark Office

Reg. No. 1,503,576
Registered Sep. 13, 1988

TRADEMARK
PRINCIPAL REGISTER

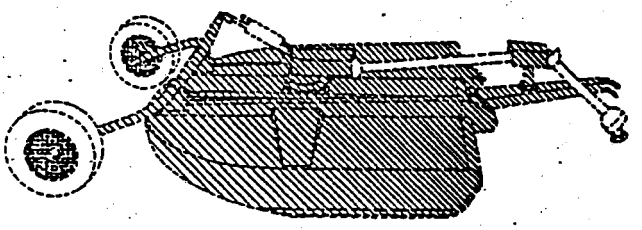

DEERE & COMPANY (DELAWARE CORPORATION)
JOHN DEERE ROAD
MOLINE, IL 61265

FOR: WHEELED AGRICULTURAL, LAWN AND GARDEN, AND MATERIAL HANDLING MACHINES, NAMELY, TILLAGE MACHINES, HAYING MACHINES, HARVESTING MACHINES, MOWERS, CUTTERS, SHREDDERS, SPRAYERS, LOADERS, SPREADERS, PLANTING MACHINES, AND SNOW REMOVAL MACHINES, IN CLASS 7 (U.S. CL. 23).

FIRST USE 12-31-1905; IN COMMERCE 12-31-1905.

OWNER OF U.S. REG. NOS. 1,254,339 AND 1,296,442.

THE DRAWING IS LINED FOR A BRIGHT GREEN COLOR, AND A BRIGHT YELLOW COLOR, AND CLAIM IS MADE FOR SUCH COLORS.

SEC. 2(F).

SER. NO. 574,301, FILED 12-19-1985.

DAVID H. STINE, EXAMINING ATTORNEY

UNITED STATES INTERNATIONAL TRADE COMMISSION
Washington, D.C.

In the Matter of CERTAIN AGRICULTURAL VEHICLES AND COMPONENTS THEREOF	Inv. No. 337-TA-487

ORDER TO CEASE AND DESIST

IT IS HEREBY ORDERED THAT China America Imports, 33898 Adler Lane, Creswell, OR 97426, cease and desist from conducting any of the following activities in the United States: importing, selling, advertising, distributing, marketing, consigning, transferring (except for exportation), offering for sale or soliciting U.S. agents or distributors for certain agricultural vehicles, as described below, in violation of Section 337 of the Tariff Act of 1930, as amended, 19 U.S.C. § 1337, except as provided in Section IV.

I.

(Definitions)

As used in this Order:

(A) "Commission" shall mean the United States International Trade Commission.

(B) "Deere" shall mean Deere & Company, One John Deere Place, Moline, Illinois 61250, complainant in this investigation, and its successors and assigns.

(C) "Respondent" shall mean China America Imports, 33898 Adler Lane, Creswell, OR 97426.

(D) "Person" shall mean an individual, or any non-governmental partnership, firm, association, corporation, or other legal or business entity other than Respondent or its majority owned or controlled subsidiaries, their successors, or assigns.

(F) "United States" shall mean the fifty States, the District of Columbia, and Puerto Rico.

(G) The terms "import" and "importation" refer to importation for entry for consumption, entry for consumption from a foreign-trade zone, and withdrawal from warehouse for consumption under the Customs laws of the United States.

(H) The term "covered product" shall mean agricultural tractors that are manufactured abroad by or on behalf of, or are imported by or on behalf of, Respondent, that infringe the following federally-registered U.S. trademarks: U.S. Reg. No.1,254,339; U.S. Reg. No. 1,502,103; or U.S. Reg. No. 1,503,576, and that are not imported by, under license from, or with the permission of the trademark owner, or as provided by law.

II.

(Applicability)

The provisions of this Cease and Desist Order shall apply to Respondent and to any of its principals, stockholders, officers, directors, employees, agents, licensees, distributors, contractors, controlled (whether by stock ownership or otherwise) and/or majority owned business entities, successors, and assigns, and to each of them, insofar as they are engaging in conduct prohibited by Section III, *infra*, for, with, or otherwise on behalf of Respondent.

III.

(Conduct Prohibited)

The following conduct of the Respondent in the United States is prohibited by the Order. Until such date on which the trademarks identified in Section I(H) above are abandoned, canceled, or rendered invalid or unenforceable, Respondent shall not:

(A) import or sell for importation into the United States covered products except under license of the trademark owner;

(B) market, distribute, offer for sale, sell, or otherwise transfer (except for exportation), in the United States imported covered products except under license of the trademark owner;

(C) advertise imported covered products except under license of the trademark owner;

(D) solicit U.S. agents or distributors for imported covered products except under license of the trademark owner; or

(E) aid or abet other entities in the importation, sale for importation, sale after importation, transfer, or distribution of covered products in the United States except under license of the trademark owner.

IV.

(Conduct Permitted)

Notwithstanding any other provision of this Order, specific conduct otherwise prohibited by the terms of this Order shall be permitted if, in a written instrument, the owner of U.S. Trademark Registration Nos. 1,254,339; 1,502,103; and 1,503,576, licenses or authorizes such specific conduct, or such specific conduct is related to the importation or sale of covered products by or for the United States.

V.

(Reporting)

For purposes of this reporting requirement, the reporting periods shall commence on January 1 of each year and shall end on the subsequent December 31. However, the first report required under this section shall cover the period from the date of issuance of this Order through December 31, 2004. This reporting requirement shall continue in force until such time as Respondent will

have truthfully reported, in two consecutive timely filed reports, that it has no inventory of covered products in the United States.

Within thirty (30) days of the last day of the reporting period, Respondent shall report to the Commission the quantity in units and the value in dollars of covered products that the Respondent has imported or sold in the United States after importation during the reporting period and the quantity in units and value in dollars of reported covered products that remain in inventory in the United States at the end of the reporting period.

Any failure to make the required report or the filing of any false or inaccurate report shall constitute a violation of this Order, and the submission of a false or inaccurate report may be referred to the U.S. Department of Justice as a possible criminal violation of 18 U.S.C. § 1001.

VI.

(Record Keeping and Inspection)

(A) For the purpose of securing compliance with this Order, Respondent shall retain any and all records relating to the sale, offer for sale, marketing, or distribution in the United States of covered products, made and received in the usual and ordinary course of business, whether in detail or in summary form, for a period of two (2) years from the close of the fiscal year to which they pertain.

(B) For the purposes of determining or securing compliance with this Order and for no other purpose, and subject to any privilege recognized by the

federal courts of the United States, duly authorized representatives of the Commission, upon reasonable written notice by the Commission or its staff, shall be permitted access and the right to inspect and copy in Respondent's principal office during office hours, and in the presence of counsel or other representatives if Respondent so chooses, all books, ledgers, accounts, correspondence, memoranda, and other records and documents, both in detail and in summary form as are required to be retained by subparagraph VI(A) of this Order.

VII.

(Service of Cease and Desist Order)

Respondent is ordered and directed to:

(A) Serve, within fifteen (15) days after the effective date of this Order, a copy of this Order upon each of its respective officers, directors, managing agents, agents, and employees who have any responsibility for the importation, marketing, distribution, or sale of imported covered products in the United States;

(B) Serve, within fifteen (15) days after the succession of any persons referred to in subparagraph VII (A) of this Order, a copy of the Order upon each successor; and

(C) Maintain such records as will show the name, title, and address of each person upon whom the Order has been served, as described in subparagraphs VII(A) and VII(B) of this Order, together with the date on which service was made.

The obligations set forth in subparagraphs VII(B) and VII(C) shall remain in effect until such date on which the trademarks described in Section I(H) herein are abandoned, canceled, or rendered invalid or unenforceable.

VIII.

(Confidentiality)

Any request for confidential treatment of information obtained by the Commission pursuant to Sections V and VI of the Order should be in accordance with section 201.6 of the Commission Rules of Practice and Procedure, 19 C.F.R. § 201.6. For all reports for which confidential treatment is sought, Respondent must provide a public version of such report with confidential information redacted.

IX.

(Enforcement)

Violation of this Order may result in any of the actions specified in section 210.75 of the Commission's Rules of Practice and Procedure, 19 C.F.R. § 210.75, including an action for civil penalties in accordance with section 337(f) of the Tariff Act of 1930, 19 U.S.C. § 1337(f), and any other action as the Commission may deem appropriate. In determining whether Respondent is in violation of this Order, the Commission may infer facts adverse to Respondent if Respondent fails to provide adequate or timely information.

X.

(Modification)

The Commission may amend this Order on its own motion or in accordance with the procedure described in section 210.76 of the Commission's Rules of Practice and Procedure, 19 C.F.R. § 210.76.

XI.

(Bonding)

The conduct prohibited by Section III of this Order may be continued during the sixty (60) day period in which this Order is under review by the President pursuant to section 337(j) of the Tariff Act of 1930, 19 U.S.C. § 1337(j), subject to Respondent posting a bond in the amount of ninety (90) percent of the entered value of the covered products. This bond provision does not apply to conduct that is otherwise permitted by Section IV of this Order. Covered products imported on or after the date of issuance of this order are subject to the entry bond as set forth in the limited exclusion order issued by the Commission, and are not subject to this bond provision.

The bond is to be posted in accordance with the procedures established by the Commission for the posting of bonds by complainants in connection with the issuance of temporary exclusion orders. *See* Commission Rule 210.68, 19 C.F.R. § 210.68. The bond and any accompanying documentation is to be provided to

and approved by the Commission prior to the commencement of conduct which is otherwise prohibited by Section III of this Order.

The bond is to be forfeited in the event that the President approves, or does not disapprove within the Presidential review period, this Order, unless the U.S. Court of Appeals for the Federal Circuit, in a final judgment, reverses any Commission final determination and order as to Respondent on appeal, or unless Respondent exports the products subject to this bond or destroys them and provides certification to that effect satisfactory to the Commission.

The bond is to be released in the event the President disapproves this Order and no subsequent order is issued by the Commission and approved, or not disapproved, by the President, upon service on Respondent of an order issued by the Commission based upon application therefore made by Respondent to the Commission.

By Order of the Commission.

Marilyn R. Abbott
Secretary

Issued: May 14, 2004

Int. Cls.: 7 and 12

Prior U.S. Cls.: 19 and 23

United States Patent and Trademark Office

Reg. No. 1,254,339
Registered Oct. 18, 1983

TRADEMARK
Principal Register

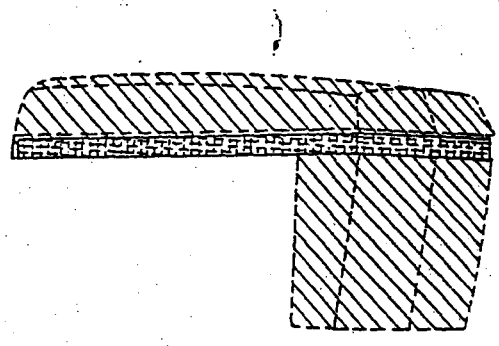

Deere & Company (Delaware corporation)
John Deere Rd.
Moline, Ill. 61265

For: AGRICULTURAL AND LAWN CARE MACHINES—NAMELY, BALERS, WINDROWERS, MOWER-CONDITIONERS, FORAGE HARVESTERS, SEEDERS, COMBINES, SPRAYERS, BEET HARVESTERS, COTTON HARVESTERS, HAY STACKING MACHINES AND LAWN MOWERS, in CLASS 7 (U.S. Cl. 23).

First use 1968; in commerce 1968.

For: TRACTORS AND POWER-OPERATED CARTS FOR CARRYING GRAIN, in CLASS 12 (U.S. Cl. 19).

First use 1956; in commerce 1956.

The drawing is lined for the colors green and yellow.

The mark consists of a horizontal yellow stripe on a green machine hood or panel.

The configuration of a machine hood is shown by dotted lines in the drawing and does not form a part of the mark.

Sec. 2(f).

Ser. No. 357,211, filed Mar. 29, 1982.

JEFFERSON FRIDAY, Examining Attorney

Int. Cl.: 12

Prior U.S. Cl.: 19

United States Patent and Trademark Office

Reg. No. 1,502,103
Registered Aug. 30, 1988

TRADEMARK
PRINCIPAL REGISTER

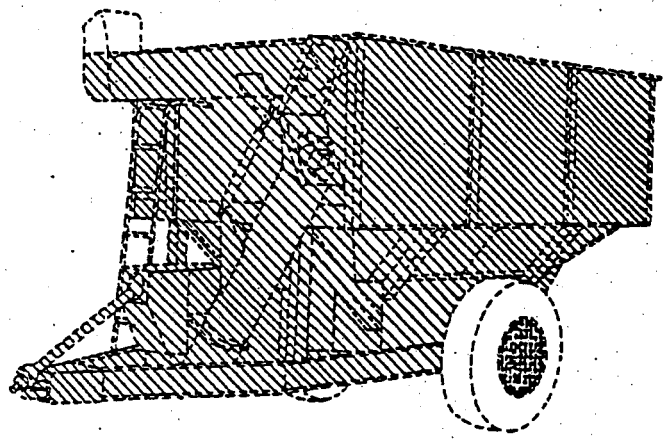

DEERE & COMPANY (DELAWARE CORPORATION)
JOHN DEERE ROAD
MOLINE, IL 61265

FOR: AGRICULTURAL TRACTORS, LAWN AND GARDEN TRACTORS, TRAILERS, WAGONS, AND CARTS, IN CLASS 12 (U.S. CL. 19).

FIRST USE 12-31-1918; IN COMMERCE 12-31-1918.

OWNER OF U.S. REG. NOS. 1,254,339 AND 1,296,442.

THE DRAWING IS LINED FOR A BRIGHT GREEN COLOR, SOMETIMES KNOWN AS "JOHN DEERE" GREEN, AND A BRIGHT YELLOW COLOR, AND CLAIM IS MADE FOR SUCH COLORS.

THE MARK CONSISTS OF A GREEN VEHICLE BODY OR FRAME WITH YELLOW WHEELS. THE CONFIGURATION OF A GRAIN CART IS SHOWN IN DOTTED LINES IN THE DRAWINGS FOR ILLUSTRATIVE PURPOSES ONLY AND DOES NOT FORM A PART OF THE MARK.

SEC. 2(F).

SER. NO. 574,308, FILED 12-19-1985.

DAVID H. STINE, EXAMINING ATTORNEY

Int. Cl.: 7

Prior U.S. Cl.: 23

United States Patent and Trademark Office

Reg. No. 1,503,576

Registered Sep. 13, 1988

TRADEMARK
PRINCIPAL REGISTER

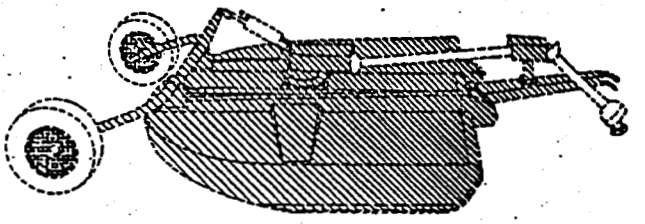

DEERE & COMPANY (DELAWARE CORPORATION)
JOHN DEERE ROAD
MOLINE, IL 61265

FOR: WHEELED AGRICULTURAL, LAWN AND GARDEN, AND MATERIAL HANDLING MACHINES, NAMELY, TILLAGE MACHINES, HAYING MACHINES, HARVESTING MACHINES, MOWERS, CUTTERS, SHREDDERS, SPRAYERS, LOADERS, SPREADERS, PLANTING MACHINES, AND SNOW REMOVAL MACHINES, IN CLASS 7 (U.S. CL. 23).

FIRST USE 12-31-1905; IN COMMERCE 12-31-1905.

OWNER OF U.S. REG. NOS. 1,254,339 AND 1,296,442.

THE DRAWING IS LINED FOR A BRIGHT GREEN COLOR, AND A BRIGHT YELLOW COLOR, AND CLAIM IS MADE FOR SUCH COLORS.

SEC. 2(F).

SER. NO. 574,301, FILED 12-19-1985.

DAVID H. STINE, EXAMINING ATTORNEY

UNITED STATES INTERNATIONAL TRADE COMMISSION
Washington, D.C.

In the Matter of CERTAIN AGRICULTURAL VEHICLES AND COMPONENTS THEREOF	Inv. No. 337-TA-487

ORDER TO CEASE AND DESIST

IT IS HEREBY ORDERED THAT Lenar Equipment, LLC, 3261 Northeast Alexander Lane, Albany, OR 97321, cease and desist from conducting any of the following activities in the United States: importing, selling, advertising, distributing, marketing, consigning, transferring (except for exportation), offering for sale or soliciting U.S. agents or distributors for certain agricultural vehicles, as described below, in violation of Section 337 of the Tariff Act of 1930, as amended, 19 U.S.C. § 1337, except as provided in Section IV.

I.

(Definitions)

As used in this Order:

(A) "Commission" shall mean the United States International Trade Commission.

(B) "Deere" shall mean Deere & Company, One John Deere Place, Moline, Illinois 61250, complainant in this investigation, and its successors and assigns.

(C) "Respondent" shall mean Lenar Equipment, LLC, 3261 Northeast Alexander Lane, Albany, OR 97321.

(D) "Person" shall mean an individual, or any non-governmental partnership, firm, association, corporation, or other legal or business entity other than Respondent or its majority owned or controlled subsidiaries, their successors, or assigns.

(F) "United States" shall mean the fifty States, the District of Columbia, and Puerto Rico.

(G) The terms "import" and "importation" refer to importation for entry for consumption, entry for consumption from a foreign-trade zone, and withdrawal from warehouse for consumption under the Customs laws of the United States.

(H) The term "covered product" shall mean agricultural tractors that are manufactured abroad by or on behalf of, or are imported by or on behalf of, Respondent, that infringe the following federally-registered U.S. trademarks: U.S. Reg. No.1,254,339; U.S. Reg. No. 1,502,103; or U.S. Reg. No. 1,503,576, and that are not imported by, under license from, or with the permission of the trademark owner, or as provided by law.

II.

(Applicability)

The provisions of this Cease and Desist Order shall apply to Respondent and to any of its principals, stockholders, officers, directors, employees, agents, licensees, distributors, contractors, controlled (whether by stock ownership or otherwise) and/or majority owned business entities, successors, and assigns, and to each of them, insofar as they are engaging in conduct prohibited by Section III, *infra*, for, with, or otherwise on behalf of Respondent.

III.

(Conduct Prohibited)

The following conduct of the Respondent in the United States is prohibited by the Order. Until such date on which the trademarks identified in Section I(H) above are abandoned, canceled, or rendered invalid or unenforceable, Respondent shall not:

(A) import or sell for importation into the United States covered products except under license of the trademark owner;

(B) market, distribute, offer for sale, sell, or otherwise transfer (except for exportation), in the United States imported covered products except under license of the trademark owner;

(C) advertise imported covered products except under license of the trademark owner;

(D) solicit U.S. agents or distributors for imported covered products except under license of the trademark owner; or

(E) aid or abet other entities in the importation, sale for importation, sale after importation, transfer, or distribution of covered products in the United States except under license of the trademark owner.

IV.

(Conduct Permitted)

Notwithstanding any other provision of this Order, specific conduct otherwise prohibited by the terms of this Order shall be permitted if, in a written instrument, the owner of U.S. Trademark Registration Nos. 1,254,339; 1,502,103; and 1,503,576, licenses or authorizes such specific conduct, or such specific conduct is related to the importation or sale of covered products by or for the United States.

V.

(Reporting)

For purposes of this reporting requirement, the reporting periods shall commence on January 1 of each year and shall end on the subsequent December 31. However, the first report required under this section shall cover the period from the date of issuance of this Order through December 31, 2004. This reporting requirement shall continue in force until such time as Respondent will

have truthfully reported, in two consecutive timely filed reports, that it has no inventory of covered products in the United States.

Within thirty (30) days of the last day of the reporting period, Respondent shall report to the Commission the quantity in units and the value in dollars of covered products that the Respondent has imported or sold in the United States after importation during the reporting period and the quantity in units and value in dollars of reported covered products that remain in inventory in the United States at the end of the reporting period.

Any failure to make the required report or the filing of any false or inaccurate report shall constitute a violation of this Order, and the submission of a false or inaccurate report may be referred to the U.S. Department of Justice as a possible criminal violation of 18 U.S.C. § 1001.

VI.

(Record Keeping and Inspection)

(A) For the purpose of securing compliance with this Order, Respondent shall retain any and all records relating to the sale, offer for sale, marketing, or distribution in the United States of covered products, made and received in the usual and ordinary course of business, whether in detail or in summary form, for a period of two (2) years from the close of the fiscal year to which they pertain.

(B) For the purposes of determining or securing compliance with this Order and for no other purpose, and subject to any privilege recognized by the

federal courts of the United States, duly authorized representatives of the Commission, upon reasonable written notice by the Commission or its staff, shall be permitted access and the right to inspect and copy in Respondent's principal office during office hours, and in the presence of counsel or other representatives if Respondent so chooses, all books, ledgers, accounts, correspondence, memoranda, and other records and documents, both in detail and in summary form as are required to be retained by subparagraph VI(A) of this Order.

VII.

(Service of Cease and Desist Order)

Respondent is ordered and directed to:

(A) Serve, within fifteen (15) days after the effective date of this Order, a copy of this Order upon each of its respective officers, directors, managing agents, agents, and employees who have any responsibility for the importation, marketing, distribution, or sale of imported covered products in the United States;

(B) Serve, within fifteen (15) days after the succession of any persons referred to in subparagraph VII (A) of this Order, a copy of the Order upon each successor; and

(C) Maintain such records as will show the name, title, and address of each person upon whom the Order has been served, as described in subparagraphs VII(A) and VII(B) of this Order, together with the date on which service was made.

The obligations set forth in subparagraphs VII(B) and VII(C) shall remain in effect until such date on which the trademarks described in Section I(H) herein are abandoned, canceled, or rendered invalid or unenforceable.

VIII.

(Confidentiality)

Any request for confidential treatment of information obtained by the Commission pursuant to Sections V and VI of the Order should be in accordance with section 201.6 of the Commission Rules of Practice and Procedure, 19 C.F.R. § 201.6. For all reports for which confidential treatment is sought, Respondent must provide a public version of such report with confidential information redacted.

IX.

(Enforcement)

Violation of this Order may result in any of the actions specified in section 210.75 of the Commission's Rules of Practice and Procedure, 19 C.F.R. § 210.75, including an action for civil penalties in accordance with section 337(f) of the Tariff Act of 1930, 19 U.S.C. § 1337(f), and any other action as the Commission may deem appropriate. In determining whether Respondent is in violation of this Order, the Commission may infer facts adverse to Respondent if Respondent fails to provide adequate or timely information.

X.

(Modification)

The Commission may amend this Order on its own motion or in accordance with the procedure described in section 210.76 of the Commission's Rules of Practice and Procedure, 19 C.F.R. § 210.76.

XI.

(Bonding)

The conduct prohibited by Section III of this Order may be continued during the sixty (60) day period in which this Order is under review by the President pursuant to section 337(j) of the Tariff Act of 1930, 19 U.S.C. § 1337(j), subject to Respondent posting a bond in the amount of ninety (90) percent of the entered value of the covered products. This bond provision does not apply to conduct that is otherwise permitted by Section IV of this Order. Covered products imported on or after the date of issuance of this order are subject to the entry bond as set forth in the limited exclusion order issued by the Commission, and are not subject to this bond provision.

The bond is to be posted in accordance with the procedures established by the Commission for the posting of bonds by complainants in connection with the issuance of temporary exclusion orders. *See* Commission Rule 210.68, 19 C.F.R. § 210.68. The bond and any accompanying documentation is to be provided to

and approved by the Commission prior to the commencement of conduct which is otherwise prohibited by Section III of this Order.

The bond is to be forfeited in the event that the President approves, or does not disapprove within the Presidential review period, this Order, unless the U.S. Court of Appeals for the Federal Circuit, in a final judgment, reverses any Commission final determination and order as to Respondent on appeal, or unless Respondent exports the products subject to this bond or destroys them and provides certification to that effect satisfactory to the Commission.

The bond is to be released in the event the President disapproves this Order and no subsequent order is issued by the Commission and approved, or not disapproved, by the President, upon service on Respondent of an order issued by the Commission based upon application therefore made by Respondent to the Commission.

By Order of the Commission.

Marilyn R. Abbott
Secretary

Issued: May 14, 2004

Int. Cls.: 7 and 12

Prior U.S. Cls.: 19 and 23

United States Patent and Trademark Office

Reg. No. 1,254,339

Registered Oct. 18, 1983

TRADEMARK

Principal Register

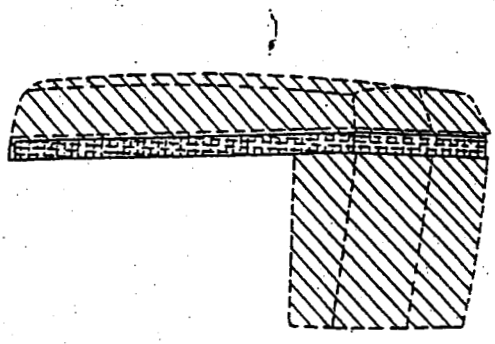

Deere & Company (Delaware corporation)
John Deere Rd.
Moline, Ill. 61265

For: AGRICULTURAL AND LAWN CARE MACHINES—NAMELY, BALERS, WINDROWERS, MOWER-CONDITIONERS, FORAGE HARVESTERS, SEEDERS, COMBINES, SPRAYERS, BEET HARVESTERS, COTTON HARVESTERS, HAY STACKING MACHINES AND LAWN MOWERS, in CLASS 7 (U.S. Cl. 23).

First use 1968; in commerce 1968.

For: TRACTORS AND POWER-OPERATED CARTS FOR CARRYING GRAIN, in CLASS 12 (U.S. Cl. 19).

First use 1956; in commerce 1956.

The drawing is lined for the colors green and yellow.

The mark consists of a horizontal yellow stripe on a green machine hood or panel.

The configuration of a machine hood is shown by dotted lines in the drawing and does not form a part of the mark.

Sec. 2(f).

Ser. No. 357,211, filed Mar. 29, 1982.

JEFFERSON FRIDAY, Examining Attorney

Int. Cl.: 12

Prior U.S. Cl.: 19

United States Patent and Trademark Office

Reg. No. 1,502,103
Registered Aug. 30, 1988

TRADEMARK
PRINCIPAL REGISTER

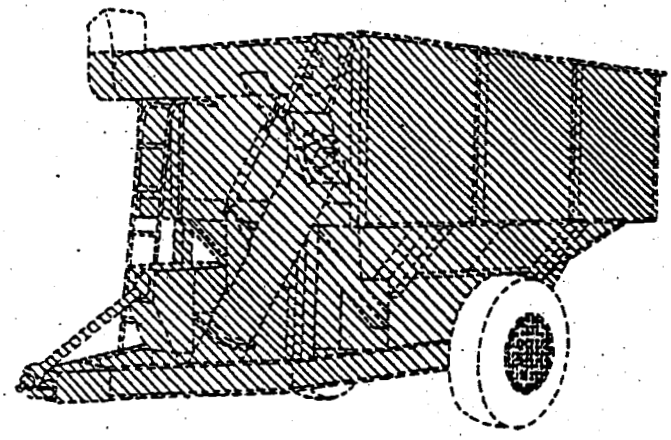

DEERE & COMPANY (DELAWARE CORPORATION)
JOHN DEERE ROAD
MOLINE, IL 61265

FOR: AGRICULTURAL TRACTORS, LAWN AND GARDEN TRACTORS, TRAILERS, WAGONS, AND CARTS, IN CLASS 12 (U.S. CL. 19).

FIRST USE 12-31-1918; IN COMMERCE 12-31-1918.

OWNER OF U.S. REG. NOS. 1,254,339 AND 1,296,442.

THE DRAWING IS LINED FOR A BRIGHT GREEN COLOR, SOMETIMES KNOWN AS "JOHN DEERE" GREEN, AND A BRIGHT YELLOW COLOR, AND CLAIM IS MADE FOR SUCH COLORS.

THE MARK CONSISTS OF A GREEN VEHICLE BODY OR FRAME WITH YELLOW WHEELS. THE CONFIGURATION OF A GRAIN CART IS SHOWN IN DOTTED LINES IN THE DRAWINGS FOR ILLUSTRATIVE PURPOSES ONLY AND DOES NOT FORM A PART OF THE MARK.

SEC. 2(F).

SER. NO. 574,308, FILED 12-19-1985.

DAVID H. STINE, EXAMINING ATTORNEY

Int. Cl.: 7

Prior U.S. Cl.: 23

United States Patent and Trademark Office

Reg. No. 1,503,576
Registered Sep. 13, 1988

TRADEMARK
PRINCIPAL REGISTER

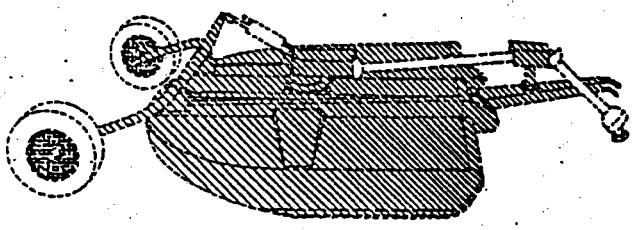

DEERE & COMPANY (DELAWARE CORPORATION)
JOHN DEERE ROAD
MOLINE, IL 61265

FOR: WHEELED AGRICULTURAL, LAWN AND GARDEN, AND MATERIAL HANDLING MACHINES, NAMELY, TILLAGE MACHINES, HAYING MACHINES, HARVESTING MACHINES, MOWERS, CUTTERS, SHREDDERS, SPRAYERS, LOADERS, SPREADERS, PLANTING MACHINES, AND SNOW REMOVAL MACHINES, IN CLASS 7 (U.S. CL. 23).

FIRST USE 12-31-1905; IN COMMERCE 12-31-1905.

OWNER OF U.S. REG. NOS. 1,254,339 AND 1,296,442.

THE DRAWING IS LINED FOR A BRIGHT GREEN COLOR, AND A BRIGHT YELLOW COLOR, AND CLAIM IS MADE FOR SUCH COLORS.

SEC. 2(F).

SER. NO. 574,301, FILED 12-19-1985.

DAVID H. STINE, EXAMINING ATTORNEY

UNITED STATES INTERNATIONAL TRADE COMMISSION
Washington, D.C.

In the Matter of CERTAIN AGRICULTURAL VEHICLES AND COMPONENTS THEREOF	Inv. No. 337-TA-487

ORDER TO CEASE AND DESIST

IT IS HEREBY ORDERED THAT Davey-Joans Tractor & Chopper Supermarket, 980 SR 13, Box 647, Williamstown, NY 13493, cease and desist from conducting any of the following activities in the United States: importing, selling, advertising, distributing, marketing, consigning, transferring (except for exportation), offering for sale or soliciting U.S. agents or distributors for certain agricultural vehicles thereof, as described below, in violation of Section 337 of the Tariff Act of 1930, as amended, 19 U.S.C. § 1337, except as provided in Section IV.

I.

(Definitions)

As used in this Order:

(A) "Commission" shall mean the United States International Trade Commission.

(B) "Deere" shall mean Deere & Company, One John Deere Place, Moline, Illinois 61250, complainant in this investigation, and its successors and assigns.

(C) "Respondent" shall mean Davey-Joans Tractor & Chopper Supermarket, 980 SR 13, Box 647, Williamstown, NY 13493.

(D) "Person" shall mean an individual, or any non-governmental partnership, firm, association, corporation, or other legal or business entity other than Respondent or its majority owned or controlled subsidiaries, their successors, or assigns.

(F) "United States" shall mean the fifty States, the District of Columbia, and Puerto Rico.

(G) The terms "import" and "importation" refer to importation for entry for consumption, entry for consumption from a foreign-trade zone, and withdrawal from warehouse for consumption under the Customs laws of the United States.

(H) The term "covered product" shall mean self-propelled forage harvesters manufactured by or under the authority of Deere (5000 and 6000 series) for sale and use in Europe which (a) bear one or more of the following federally-registered U.S. trademarks: U.S. Reg. No.1,254,339; U.S. Reg. No. 1,502,103; U.S. Reg. No. 1,503,576; U.S. Reg. No. 91,860; or U.S. Reg. No. 2,729,766, (b) are materially different from self-propelled forage harvesters manufactured by or

under the authority of Deere for sale and use in the United States, and (c) are not imported by, under license from, or with the permission of the trademark owner, or as provided by law.

II.

(Applicability)

The provisions of this Cease and Desist Order shall apply to Respondent and to any of its principals, stockholders, officers, directors, employees, agents, licensees, distributors, contractors, controlled (whether by stock ownership or otherwise) and/or majority owned business entities, successors, and assigns, and to each of them, insofar as they are engaging in conduct prohibited by Section III, *infra*, for, with, or otherwise on behalf of Respondent.

III.

(Conduct Prohibited)

The following conduct of the Respondent in the United States is prohibited by the Order. Until such date on which the trademarks identified in Section I(H) above are abandoned, canceled, or rendered invalid or unenforceable, Respondent shall not:

(A) import or sell for importation into the United States covered products except under license of the trademark owner;

(B) market, distribute, offer for sale, sell, or otherwise transfer (except for exportation), in the United States imported covered products except under license of the trademark owner;

(C) advertise imported covered products except under license of the trademark owner;

(D) solicit U.S. agents or distributors for imported covered products except under license of the trademark owner; or

(E) aid or abet other entities in the importation, sale for importation, sale after importation, transfer, or distribution of covered products in the United States except under license of the trademark owner.

IV.

(Conduct Permitted)

Notwithstanding any other provision of this Order, specific conduct otherwise prohibited by the terms of this Order shall be permitted if, in a written instrument, the owner of U.S. Trademark Registration Nos. 1,254,339; 1,502,103; 1,503,576; 91,860; and 2,729,766, licenses or authorizes such specific conduct, or such specific conduct is related to the importation or sale of covered products by or for the United States.

V.

(Reporting)

For purposes of this reporting requirement, the reporting periods shall commence on January 1 of each year and shall end on the subsequent December 31. However, the first report required under this section shall cover the period from the date of issuance of this Order through December 31, 2004. This reporting requirement shall continue in force until such time as Respondent will have truthfully reported, in two consecutive timely filed reports, that it has no inventory of covered products in the United States.

Within thirty (30) days of the last day of the reporting period, Respondent shall report to the Commission the quantity in units and the value in dollars of covered products that the Respondent has imported or sold in the United States after importation during the reporting period and the quantity in units and value in dollars of reported covered products that remain in inventory in the United States at the end of the reporting period.

Any failure to make the required report or the filing of any false or inaccurate report shall constitute a violation of this Order, and the submission of a false or inaccurate report may be referred to the U.S. Department of Justice as a possible criminal violation of 18 U.S.C. § 1001.

VI.

(Record Keeping and Inspection)

(A) For the purpose of securing compliance with this Order, Respondent shall retain any and all records relating to the sale, offer for sale, marketing, or distribution in the United States of covered products, made and received in the usual and ordinary course of business, whether in detail or in summary form, for a period of two (2) years from the close of the fiscal year to which they pertain.

(B) For the purposes of determining or securing compliance with this Order and for no other purpose, and subject to any privilege recognized by the federal courts of the United States, duly authorized representatives of the Commission, upon reasonable written notice by the Commission or its staff, shall be permitted access and the right to inspect and copy in Respondent's principal office during office hours, and in the presence of counsel or other representatives if Respondent so chooses, all books, ledgers, accounts, correspondence, memoranda, and other records and documents, both in detail and in summary form as are required to be retained by subparagraph VI(A) of this Order.

VII.

(Service of Cease and Desist Order)

Respondent is ordered and directed to:

(A) Serve, within fifteen (15) days after the effective date of this Order, a copy of this Order upon each of its respective officers, directors, managing agents,

agents, and employees who have any responsibility for the importation, marketing, distribution, or sale of imported covered products in the United States;

(B) Serve, within fifteen (15) days after the succession of any persons referred to in subparagraph VII (A) of this Order, a copy of the Order upon each successor; and

(C) Maintain such records as will show the name, title, and address of each person upon whom the Order has been served, as described in subparagraphs VII(A) and VII(B) of this Order, together with the date on which service was made.

The obligations set forth in subparagraphs VII(B) and VII(C) shall remain in effect until such date on which the trademarks described in Section I(H) herein are abandoned, canceled, or rendered invalid or unenforceable.

VIII.

(Confidentiality)

Any request for confidential treatment of information obtained by the Commission pursuant to Sections V and VI of the Order should be in accordance with section 201.6 of the Commission Rules of Practice and Procedure, 19 C.F.R. § 201.6. For all reports for which confidential treatment is sought, Respondent must provide a public version of such report with confidential information redacted.